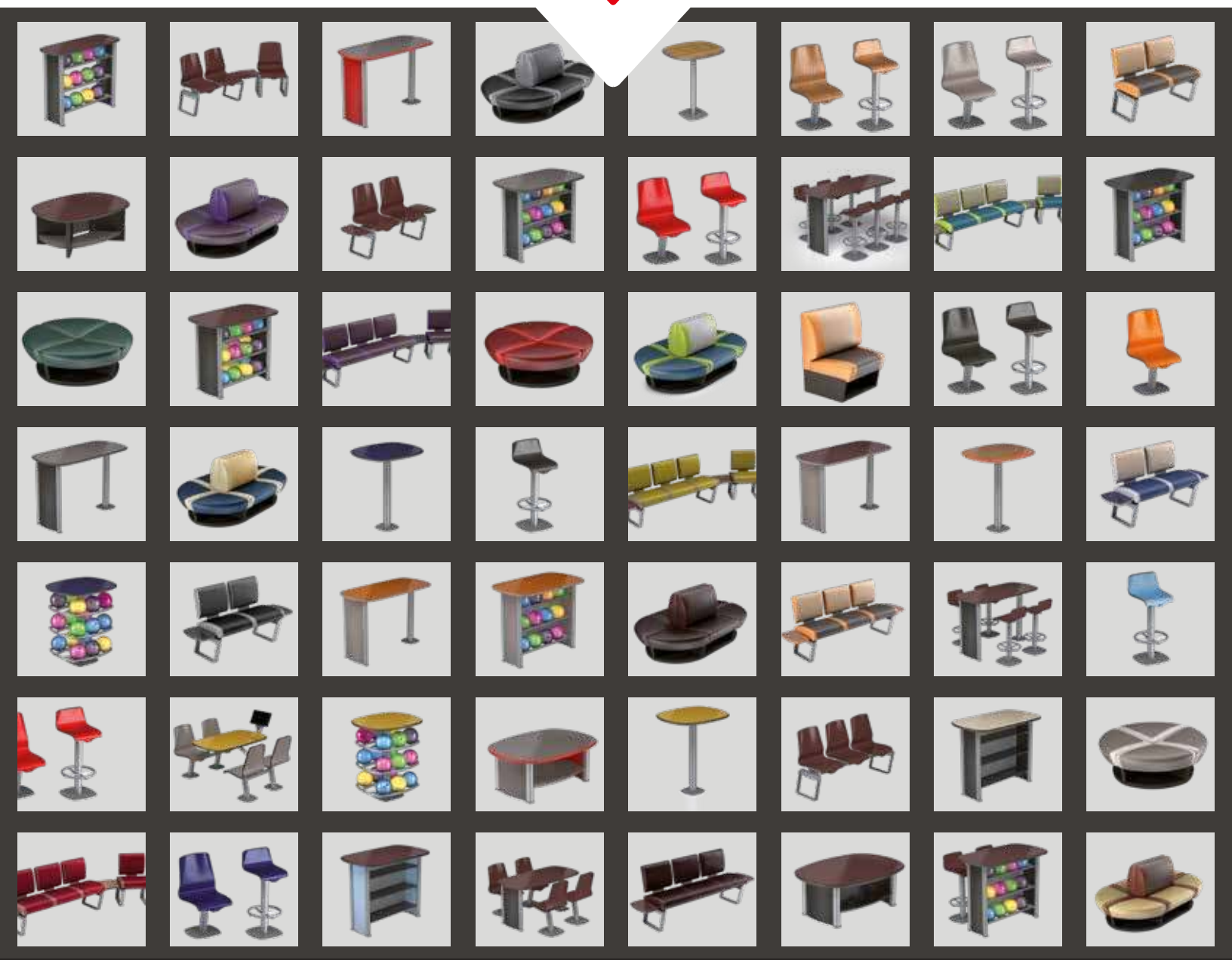

QUBICAAMF

MAKING BOWLING **AMAZING**

HARMONY

Furniture, Ball Return and Masking Collection

HARMONY

Table of Contents

HARMONY SEATING

INFINITY COLLECTION 3

Building Blocks 4
2/3 Element Arrangements 5
3/4 Element Arrangements 7
5 Element Arrangements 9
Color Options 10

SYNERGY COLLECTION 13

Upholstered Benches 14
Color Options 18

INFINITY & SYNERGY VINYL UPHOLSTERY COLOR OPTIONS 20

ENERGY COLLECTION 23

Seat Benches 24
Chairs & Stools 28
Color Options 30

HARMONY TABLE & BALL RACK COLLECTION 33

Coffee & Personal Tables 34
Cocktail & Party Tables 36
Ball Rack Tables & Personal Storage Options 40
Concourse Tables 42
Cluster Tables 44
Table Color Options 46
Cluster Table Color Options 48
Energy Seating Color Options 50
Harmony Tables & Ball Rack Color Options 50

HARMONY BALL RETURN 53

Ball Return Dimensions 54
Color Options 55

HARMONY MASKING 57

Masking Frame Dimensions 58
Masking Panel Designs 58

HARMONY COLOR CONCEPTS 67

INFINITY SEATING

INFINITY Building Blocks

Upholstered Sofa - Straight Element

612-300-222

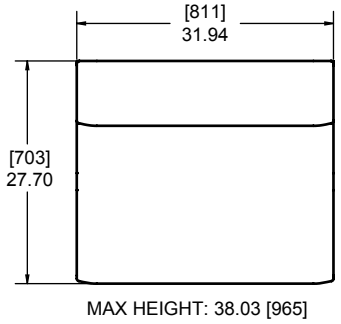

MAX HEIGHT: 38.03 [965]

Upholstered Sofa - Wedge Element

612-300-223

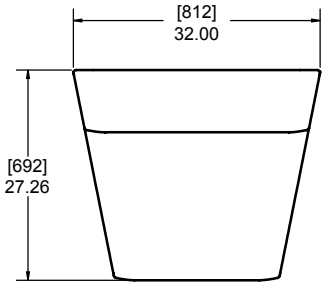

MAX HEIGHT: 38.03 [965]

Upholstered Sofa - Quarter Round Element

612-300-224

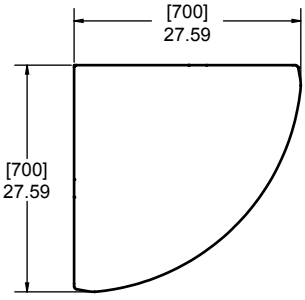

MAX HEIGHT: 19.54 [496]

2/3 Element Arrangements

Upholstered Sofa - Straight + Straight Elements Arrangement **612-300-270**

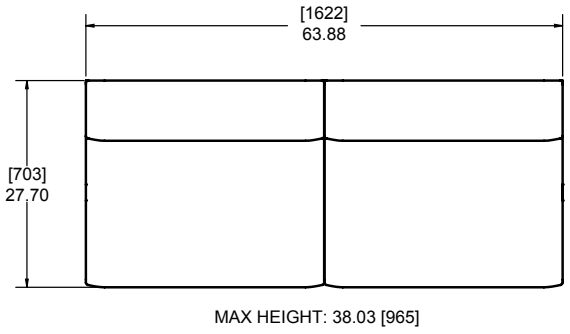

Upholstered Sofa - Wedge + Straight Elements Arrangement **612-300-271**

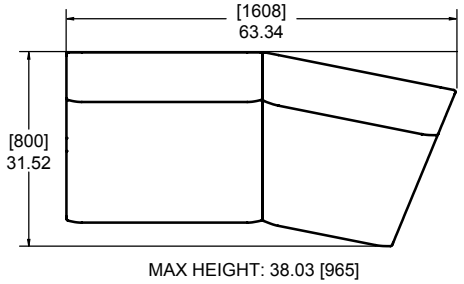

Upholstered Sofa - Wedge + Straight + Quarter Round Arrangement **612-300-273**

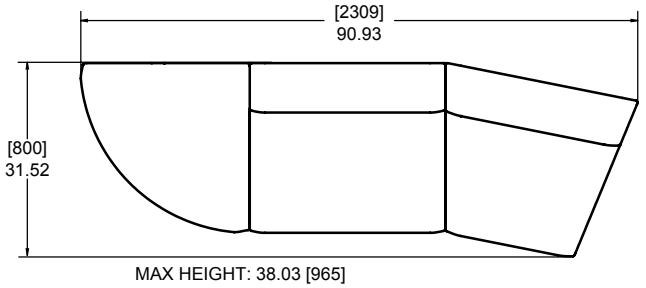

2/3 Element Arrangements

Upholstered Sofa - Straight + Straight + Quarter Round Arrangement **612-300-274**

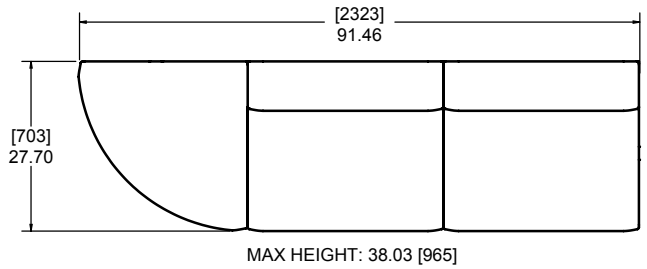

Upholstered Sofa - Wedge + Wedge + Straight Elements Arrangement **612-300-272**

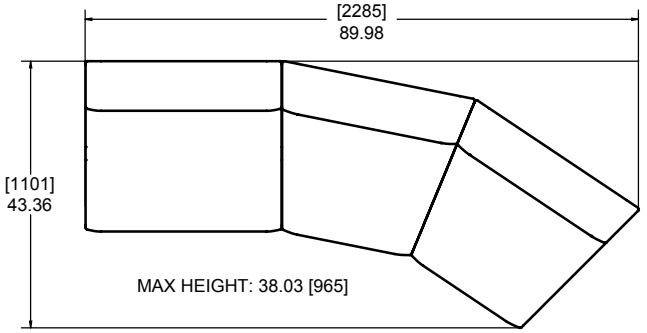

Upholstered Sofa - Wedge + Straight + Wedge Arrangement **612-300-272**

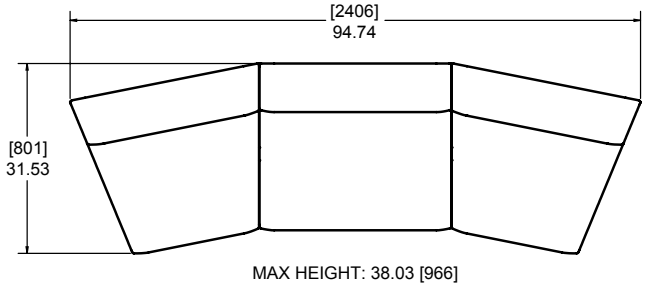

3/4 Element Arrangements

Upholstered Sofa - Wedge + Wedge + Straight + Quarter Round Arrangement **612-300-275**

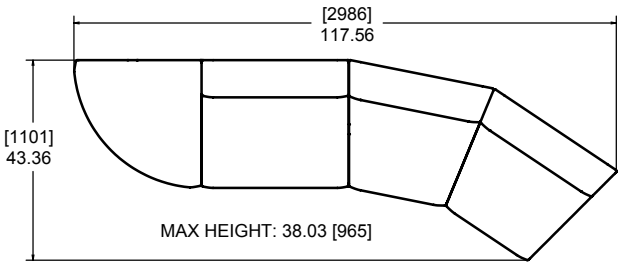

Upholstered Sofa - Wedge + Straight + Straight + Quarter Round Arrangement **612-300-276**

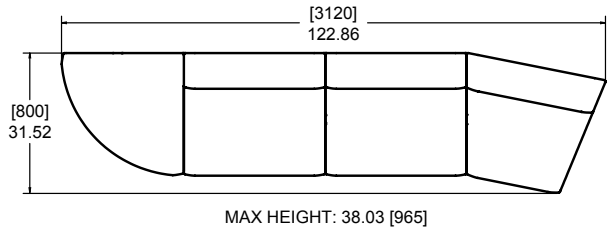

Upholstered Sofa - Straight + Straight + Straight Arrangement **612-300-277**

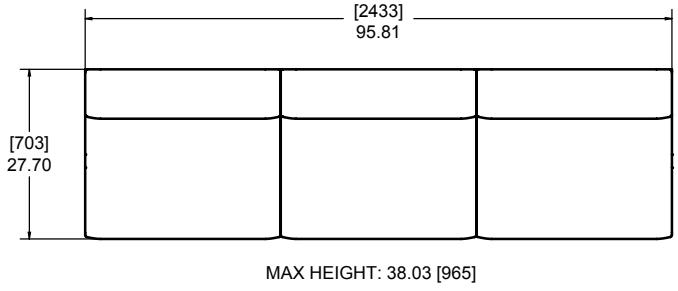

3/4 Element Arrangements

Upholstered Sofa - Quarter Round + Straight + Straight + Quarter Round Arrangement **612-300-278**

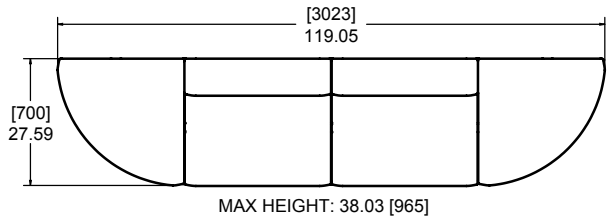

Upholstered Sofa - Wedge + Wedge + Straight + Straight Arrangement **612-300-279**

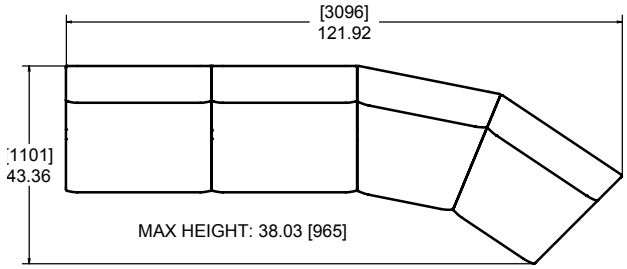

Upholstered Sofa - Straight + Straight + Straight + Quarter Round Arrangement **612-300-280**

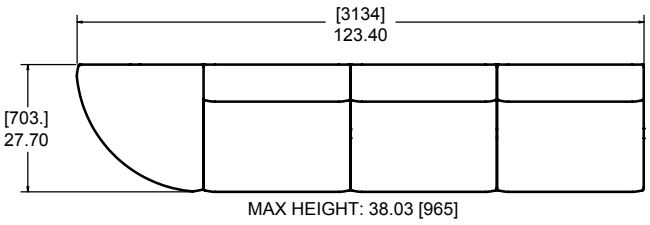

5 Element Arrangements

Upholstered Sofa - Wedge + Wedge + Straight + Straight + Quarter Round Arrangement **612-300-281**

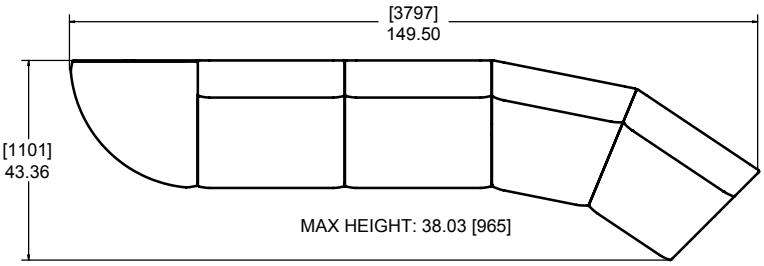

Upholstered Sofa - Quarter Round + Straight + Straight + Straight + Quarter Round Arrangement **612-300-282**

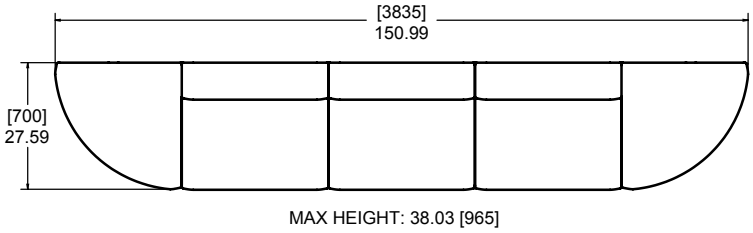

Infinity Sofa Latch and Wheel Kit **612-300-286**

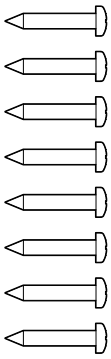

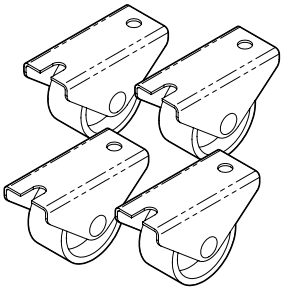

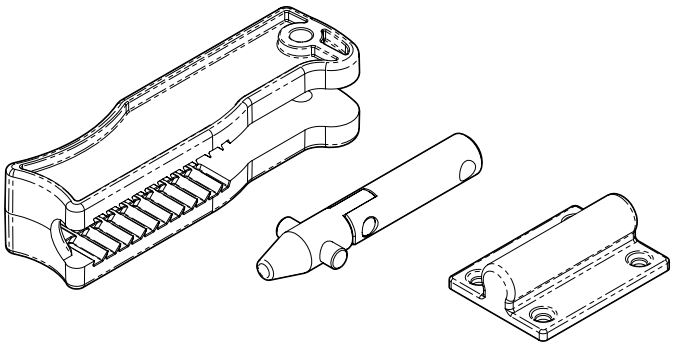

INFINITY Color Options

Pop

- Sandstone
- Huron
- Stoneware
- Slate

Rock&Roll

- Shale
- Sprite
- Chervil
- Slate

Soundtrack

- Sandstone
- Grounded
- Seville
- Slate

Folk

- Flamenco
- Flamenco
- Plum Dusk
- Slate

Jazz

- Dijon
- Dijon
- Portobello
- Slate

Disco

- Empire
- Empire
- Wisteria
- Slate

Swing

- Grounded
- Grounded
- Pomegranate
- Slate

Hard Rock

- Keystone
- Licorice
- Shale
- Slate

Ambient

- Portobello
- Doe
- Stoneware
- Slate

Blues

- Kelp
- River Clay
- Quarry
- Slate

Country

- Maroon
- Maize
- Pomegranate
- Slate

Ballad

- Nutmeg
- Keystone
- Seville
- Slate

BLACK

- Licorice
- Licorice
- Keystone
- Slate

GREEN

- Sequoia
- Sequoia
- Aloe
- Slate

BLUE

- Huron
- Huron
- Portobello
- Slate

RED

- Pomegranate
- Pomegranate
- Cardinal
- Slate

SYNERGY SEATING

SYNERGY Upholstered Bench

Upholstered Bench - 1-Seat Arrangement

612-300-211

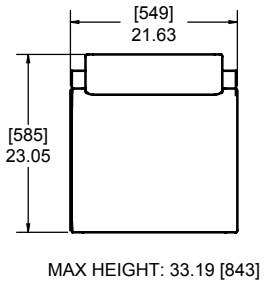

MAX HEIGHT: 33.19 [843]

Inline Upholstered Bench - 2-Seat Arrangement

612-300-212

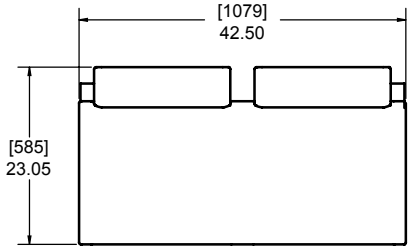

MAX HEIGHT: 33.19 [843]

Inline Upholstered Bench - 3-Seat Arrangement

612-300-213

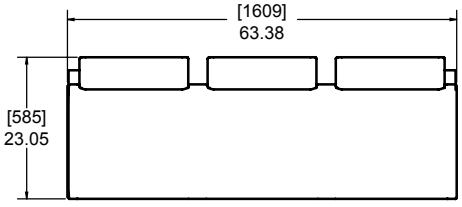

MAX HEIGHT: 33.19 [843]

Upholstered Bench - 2+1 -Seat w/ Wedge Union Table Arrangement **612-300-214**

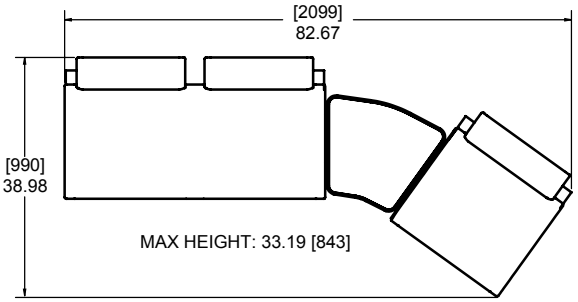

Inline Upholstered Bench - 3-Seat Arrangement w/ End Tables **612-300-216**

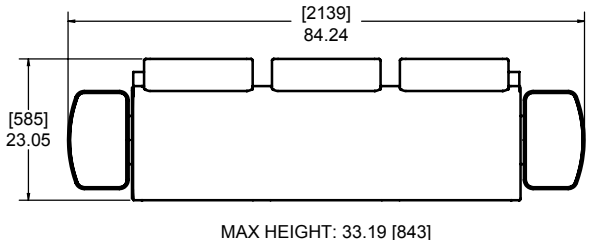

Upholstered Bench - 2-Seat Arrangement w/ End Tables **612-300-217**

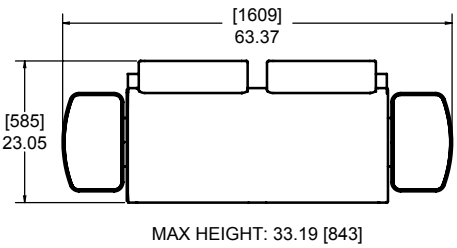

Upholstered Bench

Upholstered Bench - 2+1 - Seat Arrangement w/ Wedge Union Table and End Tables **612-300-215**

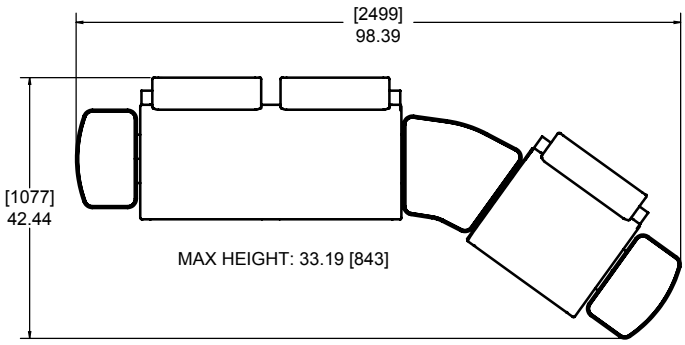

Upholstered Bench - 3+1 - Seat Arrangement w/ Wedge Union Table **612-300-218**

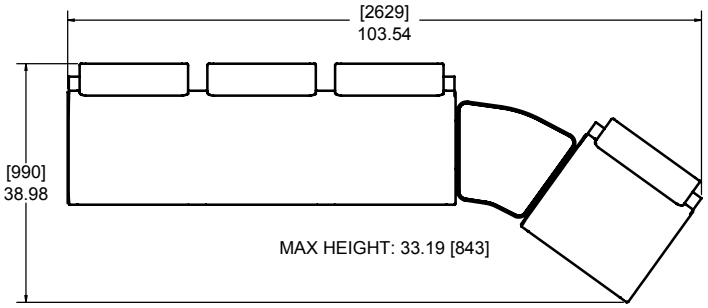

Upholstered Bench - 3+1 - Seat Arrangement w/ Wedge Union Table and End Tables **612-300-219**

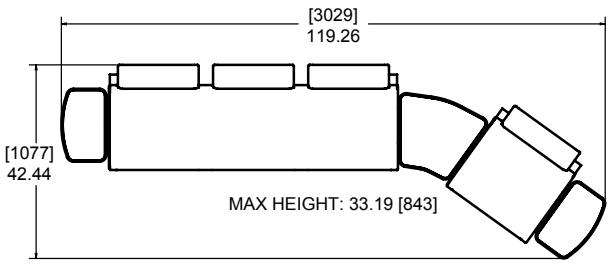

Upholstered Bench - 2+2 - Seat Arrangement w/ Straight Union Table **612-300-220**

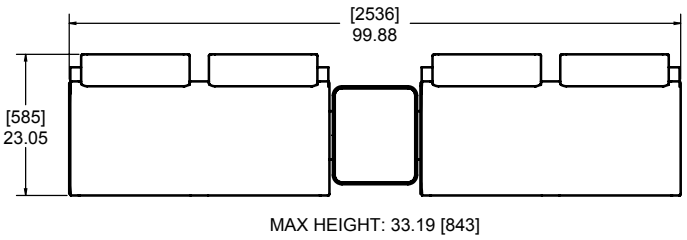

Upholstered Bench - 2+2 - Seat Arrangement w/ Straight Union Table and End Tables **612-300-221**

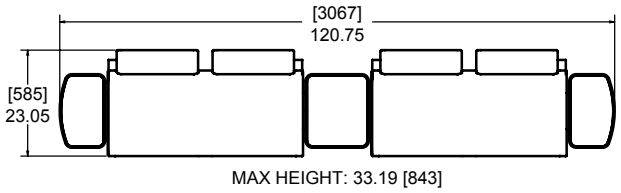

Table Kit for Synergy/Energy

612-300-323
End Table Kit

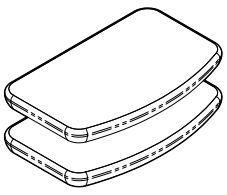

612-300-324
Angled Table Union Kit

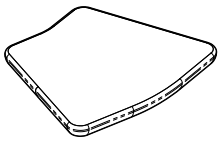

612-300-325
Straight Table Union Kit

SYNERGY Color Options

Pop

- Sandstone
- Huron
- Stoneware

Standard End/Union Table

- Navy Blue - Slate

Optional end/union table available

- Empire Mahogany - Greige
- Wisconsin Oak - Greige
- Sugar Maple - Greige

Rock&Roll

- Shale
- Sprite
- Chervil

Standard End/Union Table

- Greige - Slate

Optional end/union table available

- Empire Mahogany - Slate
- Wisconsin Oak - Slate
- Sugar Maple - Slate

Soundtrack

- Sandstone
- Grounded
- Seville

Standard End/Union Table

- Wisconsin Oak - Bittersweet

Optional end/union table available

- Wisconsin Oak - Brown

Folk

- Flamenco
- Flamenco
- Plum Dusk

Standard End/Union Table

- Wisconsin Oak - Slate

Optional end/union table available

- Empire Mahogany - Slate

Jazz

- Dijon
- Dijon
- Portobello

Standard End/Union Table

- Empire Mahogany - Greige

Optional end/union table available

- Wisconsin Oak - Slate

Disco

- Empire
- Empire
- Wisteria

Standard End/Union Table

- Slate - Slate

Optional end/union table available

- Empire Mahogany - Slate

Swing

- Grounded
- Grounded
- Pomegranate

Standard End/Union Table

- Empire Mahogany - Slate

Hard Rock

- Keystone
- Licorice
- Shale

Standard End/Union Table

- Slate - Slate

Optional end/union table available

- Empire Mahogany - Slate
- Wisconsin Oak - Slate
- Sugar Maple - Slate

Ambient

Portobello
Doe
Stoneware

Standard End/Union Table
Greige - Slate

Optional end/union table available
Empire Mahogany - Slate
Wisconsin Oak - Slate
Sugar Maple - Slate

Blues

Kelp
River Clay
Quarry

Standard End/Union Table
Wisconsin Oak - Greige

Optional end/union table available
Empire Mahogany - Greige

Country

Maroon
Maize
Pomegranate

Standard End/Union Table
Wisconsin Oak - Slate

Optional end/union table available
Empire Mahogany - Slate

Ballad

Nutmeg
Keystone
Seville

Standard End/Union Table
Slate - Slate

BLACK

Licorice
Licorice
Keystone

Standard End/Union Table
Greige - Slate

Optional end/union table available
Empire Mahogany - Slate
Wisconsin Oak - Slate

GREEN

Sequoia
Sequoia
Aloe

Standard End/Union Table
Slate - Slate

Optional end/union table available
Empire Mahogany - Slate
Wisconsin Oak - Slate

BLUE

Huron
Huron
Portobello

Standard End/Union Table
Greige - Slate

Optional end/union table available
Wisconsin Oak - Slate

RED

Pomegranate
Pomegranate
Cardinal

Standard End/Union Table
Greige - Navajo Red

Optional end/union table available
Empire Mahogany - Slate

INFINITY & SYNERGY VINYL UPHOLSTERY COLOR OPTIONS

Back

Shale

Djon

Empire

Flamenco

Sandstone

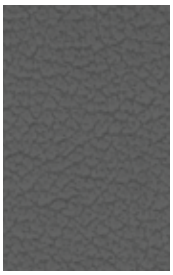
Keystone

Grounded

Portobello

Seat

Sprite

Djon

Empire

Flamenco

Grounded

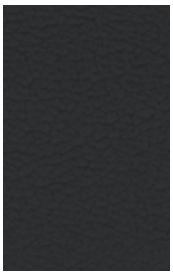
Licorice

Doe

River clay

Accent

Chervil

Portobello

Wisteria

Plum Dusk

Seville

Shale

Stoneware

Quarry

Base

Slate

Kelp

Marron

Nutmeg

Sequoia

Huron

Pomegranate

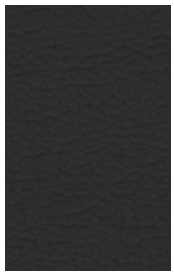
Licorice

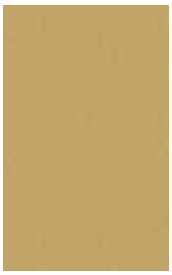
Maize

Sequoia

Huron

Pomegranate

Pomegranate

Aloe

Cardinal

Keystone

Discover all the available possibilities at
www.qubicaamf.com/Harmony-Furniture/Harmony
or contact your QubicaAMF representative today!

ENERGY SEATING

ENERGY Bench Seat

Inline Bench Seat - 1-Seat Arrangement

612-300-201

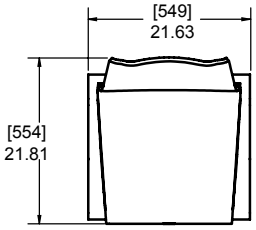

MAX HEIGHT: 35.88 [911]

Inline Bench Seat - 2-Seat Arrangement

612-300-202

MAX HEIGHT: 35.88 [911]

Inline Bench Seat - 3-Seat Arrangement

612-300-203

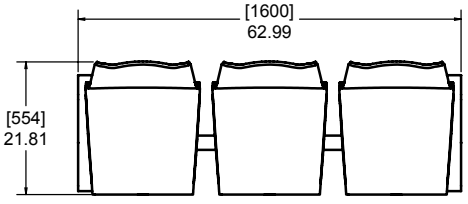

MAX HEIGHT: 35.88 [911]

Bench Seat - 2+1 - Seat Arrangement w/ Wedge Union Table **612-300-204**

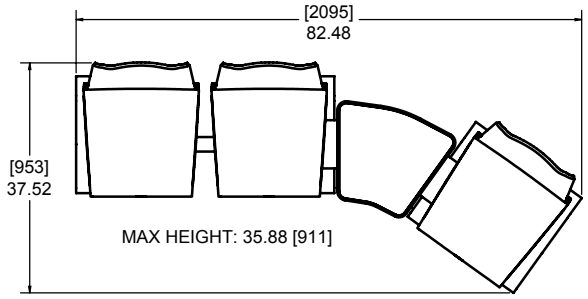

Bench Seat - 2+1 - Seat Arrangement w/ Wedge Union Table and End Tables **612-300-205**

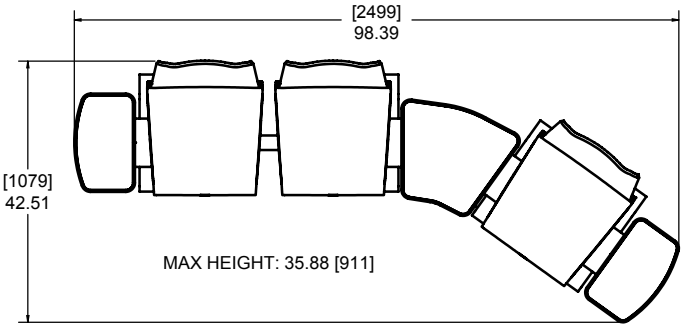

Bench Seat - 3-Seat Arrangement w/ End Tables **612-300-206**

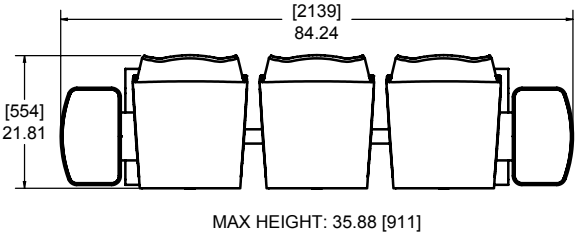

Bench Seat

Bench Seat - 2-Seat Arrangement w/ End Tables **612-300-207**

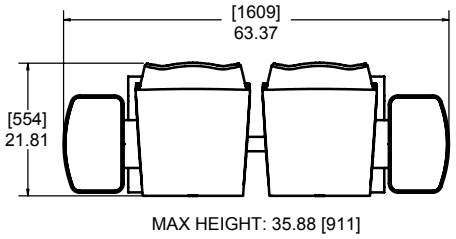

Bench Seat - 3+1- Seat Arrangement w/ Wedge Union Table **612-300-208**

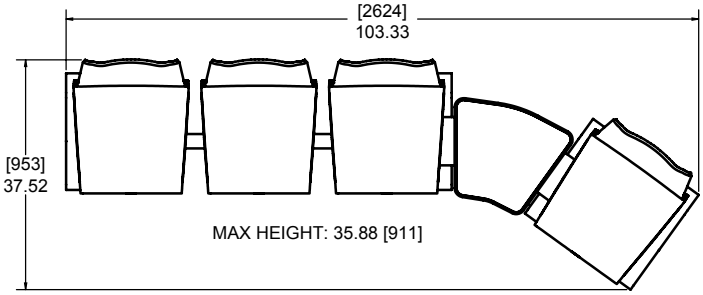

Bench Seat - 3+1 - Seat Arrangement w/ Wedge Union Table and End Tables **612-300-209**

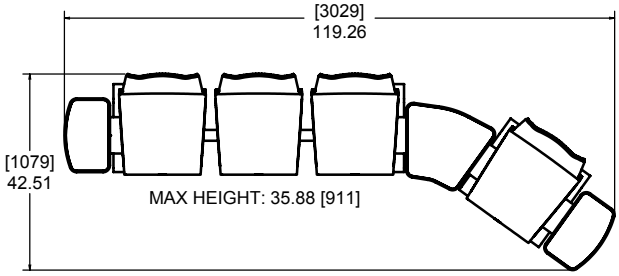

Bench Seat - 2+2- Seat Arrangement w/ Straight Union Table **612-300-210**

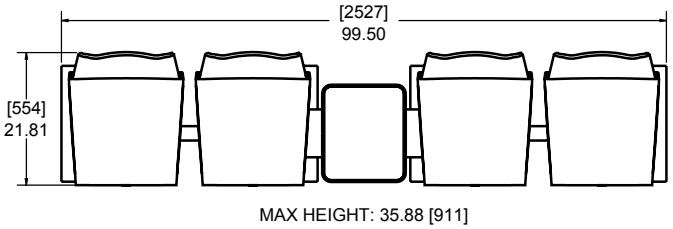

Bench Seat - 2+2 - Seat Arrangement w/ Straight Union Table and End Tables **612-300-200**

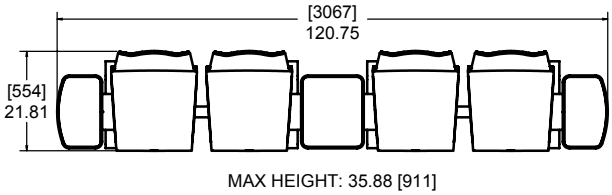

Table Kit for Synergy/Energy

612-300-323
End Table Kit

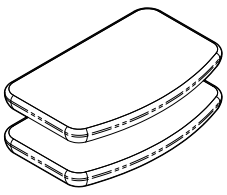

612-300-324
Angled Table Union Kit

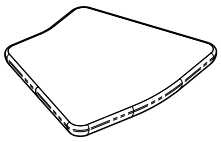

612-300-325
Straight Table Union Kit

ENERGY Chairs & Stools

Chair - Table Height, Swivel, Bolt Down

612-300-225

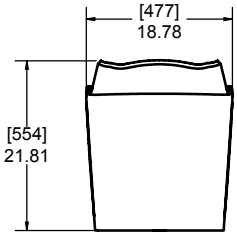

MAX HEIGHT: 36.46 [926]

Chair- Table Height, Non-Swivel, Bolt Down

612-300-283

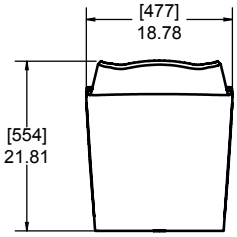

MAX HEIGHT: 36.46 [926]

Chair - Table Height, Non-Swivel, Free Standing

612-300-227

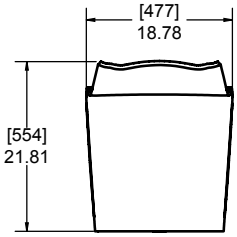

MAX HEIGHT: 36.46 [926]

Stool - Bar Height, Swivel, Bolt Down

612-300-228

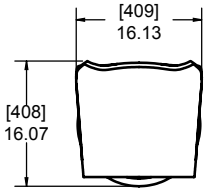

MAX HEIGHT: 37.91 [962]

Stool - Bar Height, Swivel, Free Standing

612-300-229

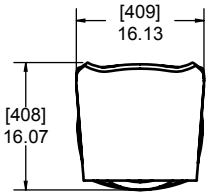

MAX HEIGHT: 37.91 [962]

Navajo Red

Bittersweet

French blue

Royal Blue

Greige

Slate

Sugar Maple

Wisconsin Oak

Empire Mahogany

ENERGY Color Options

Navajo Red

Standard End/Union Table
- Greige - Navajo Red

Optional End/Union Table Available
- Empire Mahogany - Slate

Bittersweet

Standard End/Union Table
- Slate - Slate

Optional End/Union Table Available
- Wisconsin Oak - Bittersweet
- Wisconsin Oak - Brown

Royal Blue

Standard End/Union Table
- Navy Blue - Slate

Optional End/Union Table Available
- Empire Mahogany - Greige
- Wisconsin Oak - Greige
- Sugar Maple - Greige

French Blue

Standard End/Union Table
- Slate - Slate

Optional End/Union Table Available
- Empire Mahogany - Slate

Slate

Standard End/Union Table
- Slate - Slate

Optional End/Union Table Available
- Empire Mahogany - Slate
- Wisconsin Oak - Slate
- Wisconsin Oak - Bittersweet
- Wisconsin Oak - Brown
- Greige - Slate

Greige

Standard End/Union Table
- Greige - Slate

Optional End/Union Table Available
- Empire Mahogany - Slate
- Empire Mahogany - Greige
- Wisconsin Oak - Slate
- Wisconsin Oak - Brown
- Sugar Maple - Slate
- Slate - Slate

Wisconsin Oak

Standard End/Union Table

Wisconsin Oak - Slate

Optional End/Union Table Available

Wisconsin Oak - Greige

Wisconsin Oak - Brown

Empire Mahogany

Standard End/Union Table

Slate - Slate

Optional End/Union Table Available

Empire Mahogany - Slate

Sugar Maple

Standard End/Union Table

Greige - Slate

Optional End/Union Table Available

Sugar Maple - Slate

Harmony Table and Ball Rack Collection

Coffee & Personal Tables

Medium Coffee Table **612-300-232**

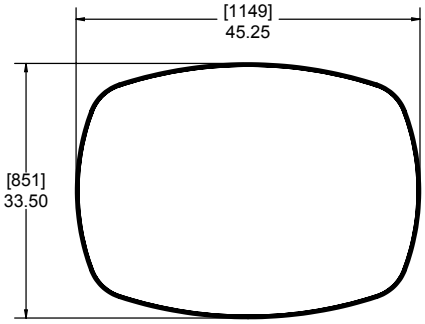

HEIGHT: 17.83 [453]

Medium Modular Coffee Table **612-300-234**

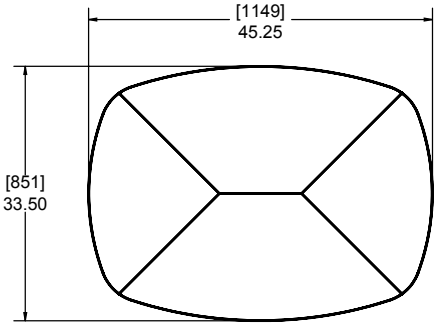

HEIGHT: 17.83 [453]

Small Modular Coffee Table **612-300-231**

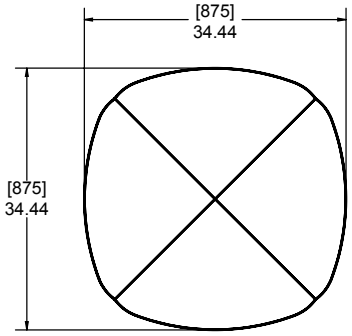

HEIGHT: 17.83 [453]

Arrow Variable Height Table, Free Standing **612-300-235**

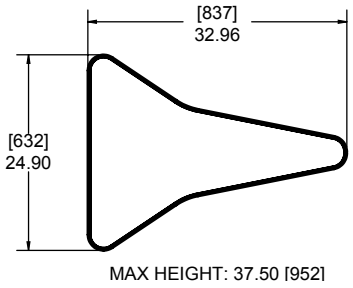

Arrow Fixed Height Table, Bolt Down **612-300-253**

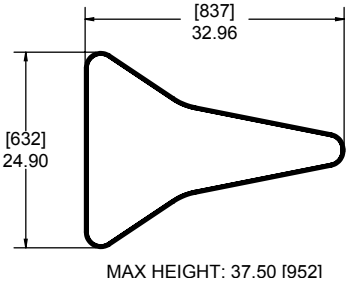

Personal Table **612 300 299**

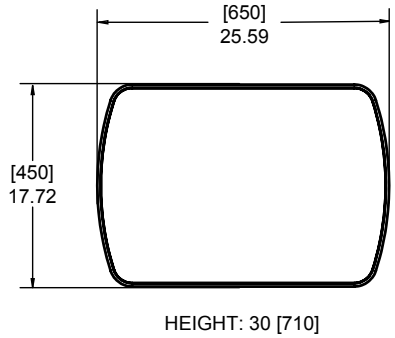

Cocktail & Party Tables

Stools not included

4-Seat Rectangular Table, Regular Height, Bolt Down **612-300-236**

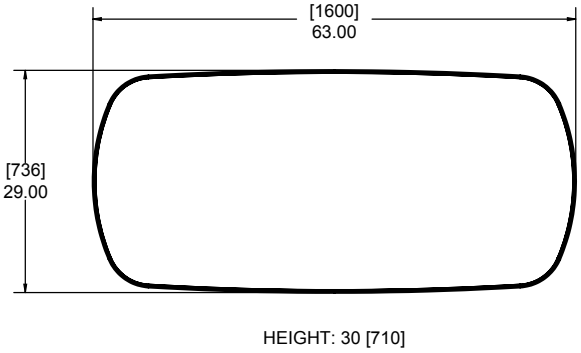

HEIGHT: 30 [710]

4-Seat Rectangular Table, High Top, Bolt Down **612-300-237**

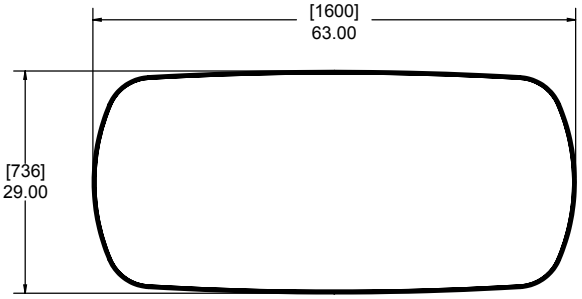

HEIGHT: 41.73 [1060]

5-Seat Rectangular Table, Regular Height, Bolt Down **612-300-238**

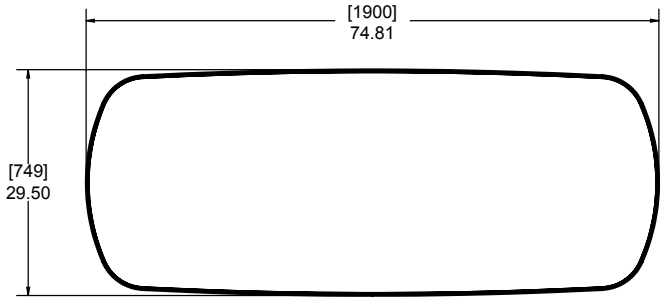

HEIGHT: 30 [710]

6-Seat Rectangular Table, High Top, Bolt Down **612-300-239**

4-Seat Rectangular Table, Regular Height, Free Standing **621-300-290**

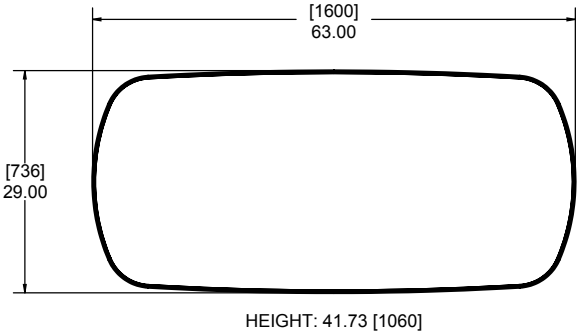

6 seat Rectangular Table, Regular Height, Bolt Down **621-300-327**

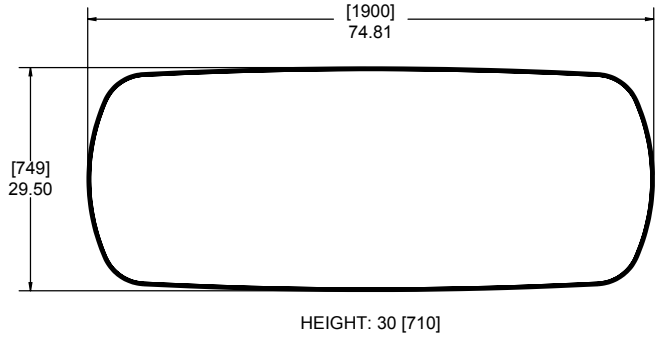

Cocktail & Party Tables

Stools not included

6-Seat Rectangular Table, Regular Height, Free Standing **621-300-292**

Cocktail Table, Regular Height, Free Standing **612-300-241**

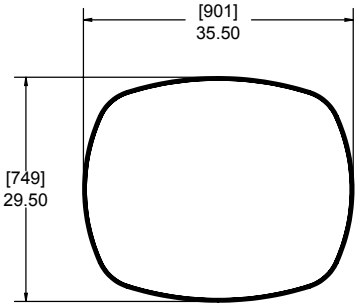

Cocktail Table, Regular Height, Bolt Down **612-300-242**

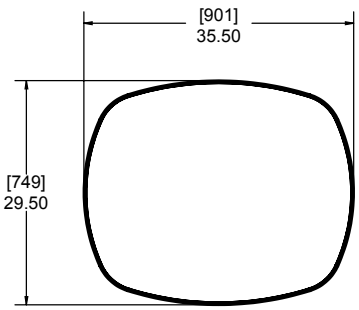

Cocktail Table, High Top, Free Standing **612-300-243**

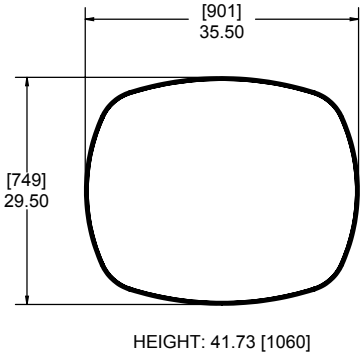

HEIGHT: 41.73 [1060]

Cocktail Table, High Top, Bolt Down **612-300-244**

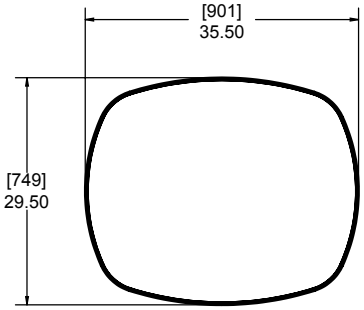

HEIGHT: 41.73 [1060]

Ball Rack Tables & Personal Storage Options

Wedge Table (w/ Coat Hook Option) for Sofa/Bench Seat **612-300-247**

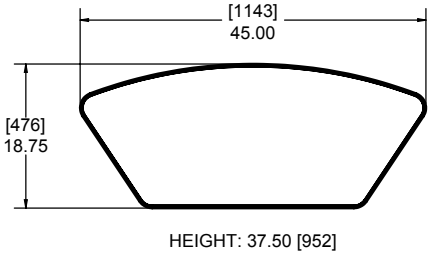

Wedge Ball Storage Table (3 levels, 12 balls) **612-300-252**

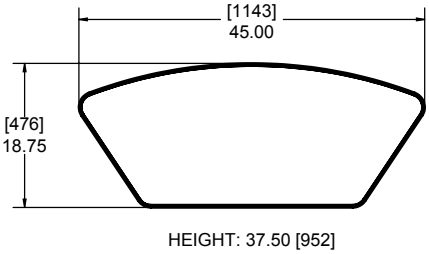

Inline Narrow Ball Storage Table (3 levels, 12 balls) **612-300-250**

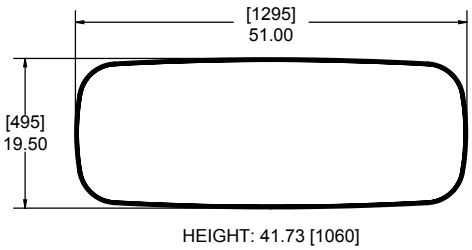

Inline Wide Ball Storage Table (3 levels, 24 balls) **612-300-251**

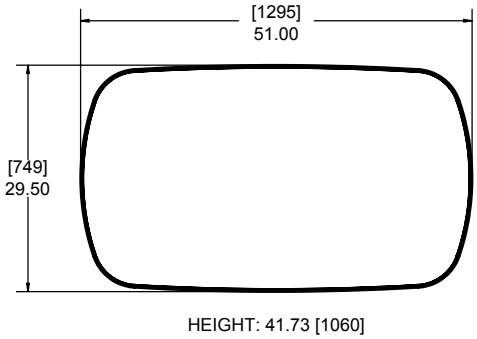

Circular Ball Storage Table (3 levels, 18 balls) for sofa/bench seat **612-300-249**

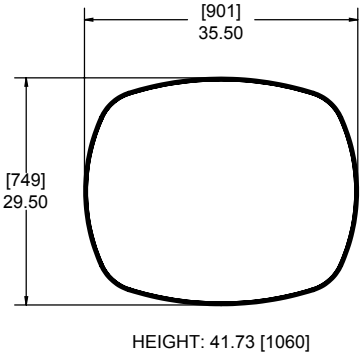

Concourse Tables

Stools not included

Concourse Table - Rectangular Top, Ball Storage Option (3 levels, 12 balls) **612-300-254**

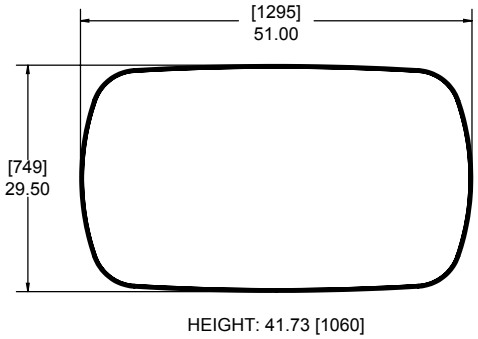

Concourse Table - Rectangular Top, Shelves Option **612-300-255**

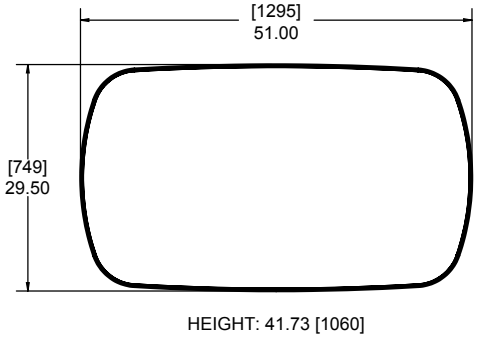

Concourse Table - Rectangular Top, Coat Hook Option **612-300-256**

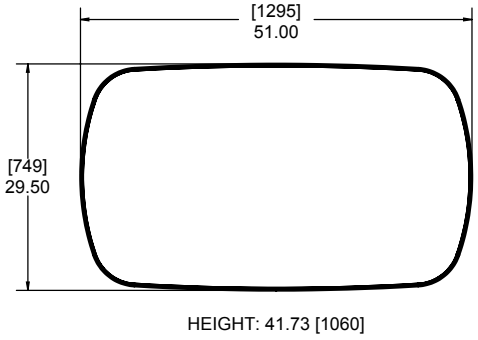

Concourse Table - Trapezoidal Top, Ball Storage Option

612-300-257

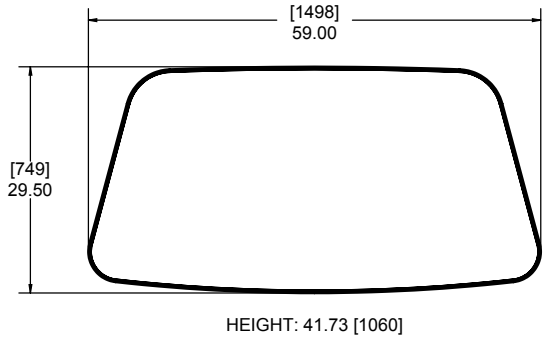

Concourse Table - Trapezoidal Top, Coat Hook Option

612-300-259

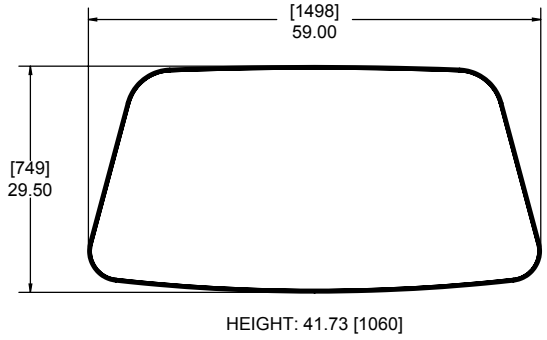

Cluster Tables

4-Seat Rectangular Top Table with 4 seats attached* **612-300-245**

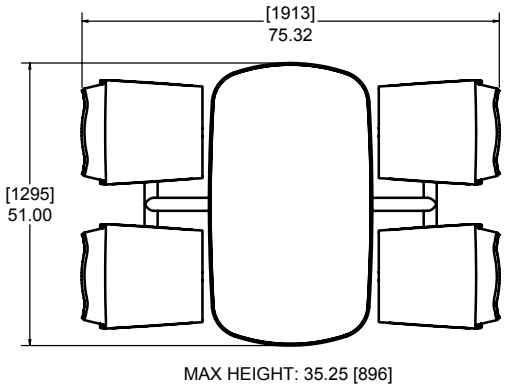

4-Seat Triangular Top Table with 4 seats attached* **612-300-246**

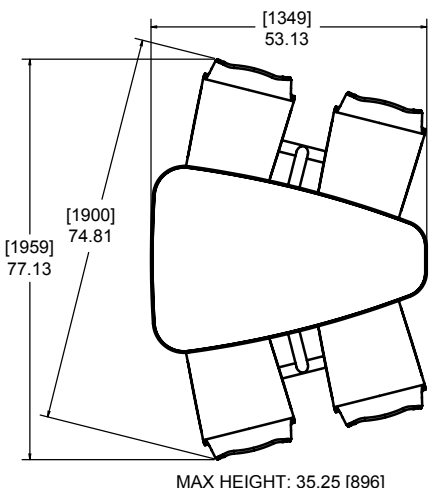

* Bowler console not included with the table.

TABLE Color Options

Table Top - T-Mold
Greige - Navajo Red

Shelf Top - Shelf Edge
Greige - Greige

Curved Leg
Navajo Red

Table Top - T-Mold
Empire Mahogany - Greige

Shelf Top - Shelf Edge
Greige - Greige

Curved Leg
Greige

Table Top - T-Mold
Navy Blue - Slate

Shelf Top - Shelf Edge
Navy Blue - Slate

Curved Leg
Slate

Table Top - T-Mold
Wisconsin Oak - Slate

Shelf Top - Shelf Edge
Slate - Slate

Curved Leg
Slate

Table Top - T-Mold
Wisconsin Oak - Bittersweet

Shelf Top - Shelf Edge
Greige - Greige

Curved Leg
Greige

Table Top - T-Mold
Bittersweet - Slate

Shelf Top - Shelf Edge
Greige - Greige

Curved Leg
Greige

Table Top - T-Mold
Forsythia - Slate

Shelf Top - Shelf Edge
Greige - Slate

Curved Leg
Greige

Table Top - T-Mold
Empire Mahogany - Slate

Shelf Top - Shelf Edge
Slate - Slate

Curved Leg
Slate

Table Top - T-Mold
Empire Mahogany - Slate

Shelf Top - Shelf Edge
Slate - Slate

Curved Leg
French Blue

Table Top - T-Mold
Wisconsin Oak - Greige

Shelf Top - Shelf Edge
Wisconsin Oak - Greige

Curved Leg
Greige

Table Top - T-Mold
Wisconsin Oak - Slate

Shelf Top - Shelf Edge
Wisconsin Oak - Slate

Curved Leg
Slate

Table Top - T-Mold
Slate - Slate

Shelf Top - Shelf Edge
Slate - Slate

Curved Leg
Slate

Table Top - T-Mold
Greige - Slate

Shelf Top - Shelf Edge
Greige - Greige

Curved Leg
Greige

Table Top - T-Mold
Greige - Navajo Red

Shelf Top - Shelf Edge
Slate - Slate

Curved Leg
Slate

Table Top - T-Mold
Greige- Slate

Shelf Top - Shelf Edge
Slate - Slate

Curved Leg
Slate

Table Top - T-Mold
Sugar Maple - Greige

Shelf Top - Shelf Edge
Greige - Greige

Curved Leg
Greige

Table Top - T-Mold
Sugar Maple - Slate

Shelf Top - Shelf Edge
Slate - Slate

Curved Leg
Slate

Table Top - T-Mold
Wisconsin Oak - Brown

Shelf Top - Shelf Edge
Greige - Greige

Curved Leg
Greige

CLUSTER TABLE Color Options

Bowler consoles are an optional item. These are not included with the Cluster Table.

Table Top - T-Mold
Greige - Navajo Red

Chair
Greige

Table Top - T-Mold
Empire Mahogany - Greige

Chair
Greige

Table Top - T-Mold
Navy Blue - Slate

Chair
Slate

Table Top - T-Mold
Wisconsin Oak - Slate

Chair
Wisconsin Oak

Table Top - T-Mold
Wisconsin Oak - Bittersweet

Chair
Slate

Table Top - T-Mold
Bittersweet - Slate

Chair
Royal Blue

Table Top - T-Mold
Forsythia - Slate

Chair
Greige

Table Top - T-Mold
Empire Mahogany - Slate

Chair
Slate

Table Top - T-Mold
Empire Mahogany - Slate

Chair
Greige

Table Top - T-Mold
Wisconsin Oak - Greige

Chair
Wisconsin Oak

Table Top - T-Mold
Greige - Slate

Chair
Slate

Table Top - T-Mold
Slate - Slate

Chair
Slate

Table Top - T-Mold
Greige- Slate

Chair
Greige

Table Top - T-Mold
Greige - Navajo Red

Chair
Navajo Red

Table Top - T-Mold
Empire Mahogany - Slate

Chair
French Blue

Table Top - T-Mold
Wisconsin Oak - Slate

Chair
Slate

Table Top - T-Mold
Wisconsin Oak - Bittersweet

Shelf Top - Shelf Edge
Bittersweet

Table Top - T-Mold
Wisconsin Oak - Brown

Chair
Bittersweet

Table Top - T-Mold
Wisconsin Oak - Brown

Chair
Slate

Energy Seating and Harmony Table & Ball Rack Color Options

Energy Seating

Greige

Slate

Wisconsin Oak

Empire Mahogany

Sugar Maple

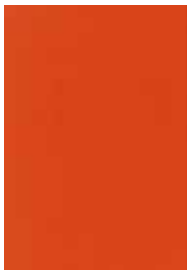
Bittersweet

Royal Blue

French blue

Navajo Red

Table Tops

Greige

Slate

Wisconsin Oak

Empire Mahogany

Sugar Maple

Bittersweet

Forsythia

Navy blue

Table Curved Legs

Greige

Slate

French blue

Navajo Red

T-Molding

Greige

Slate

Navajo Red

Bittersweet

Brown

Table Shelves

Greige

Slate

Wisconsin Oak

Navy blue

Discover all the available possibilities at
www.qubicaamf.com/Harmony-Furniture/Harmony
or contact your QubicaAMF representative today!

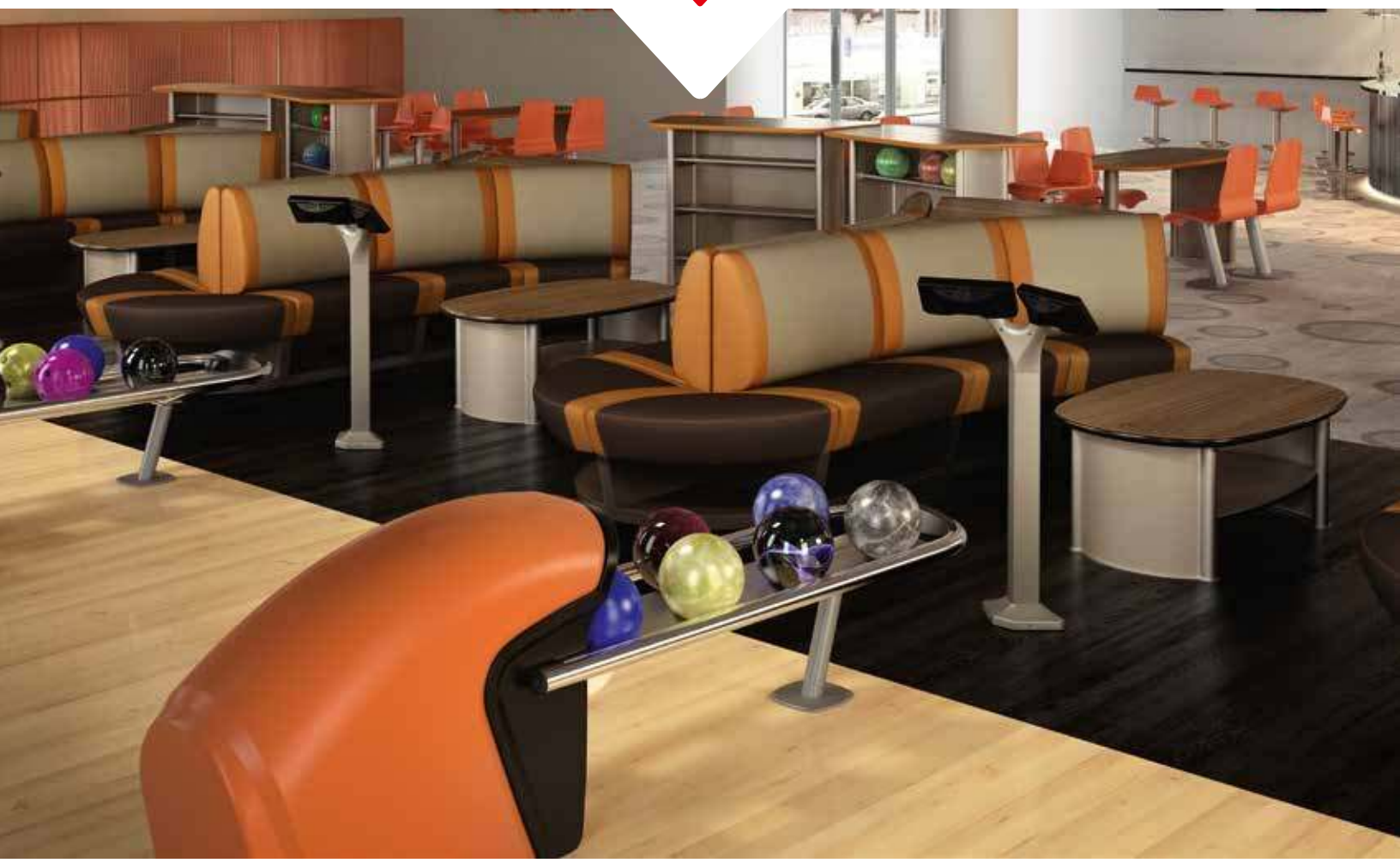

HARMONY BALL RETURN

Ball Return

Harmony Complete Ball Return (holds 12 balls) **612-300-260**

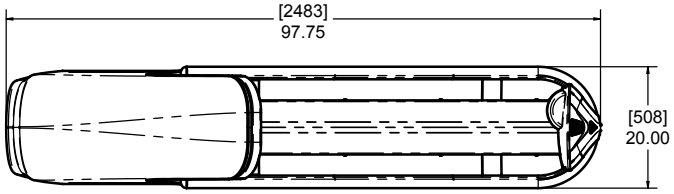

Harmony Lower Ball Rack Option (holds 8 balls) **612-300-262**

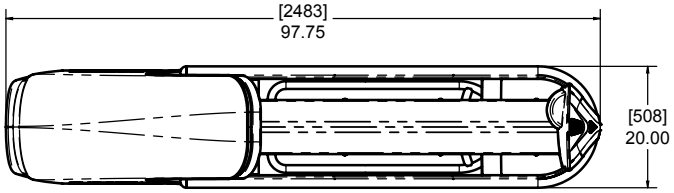

Color Options

Red Coral

Orange

Green British

Blue

Gray

Black

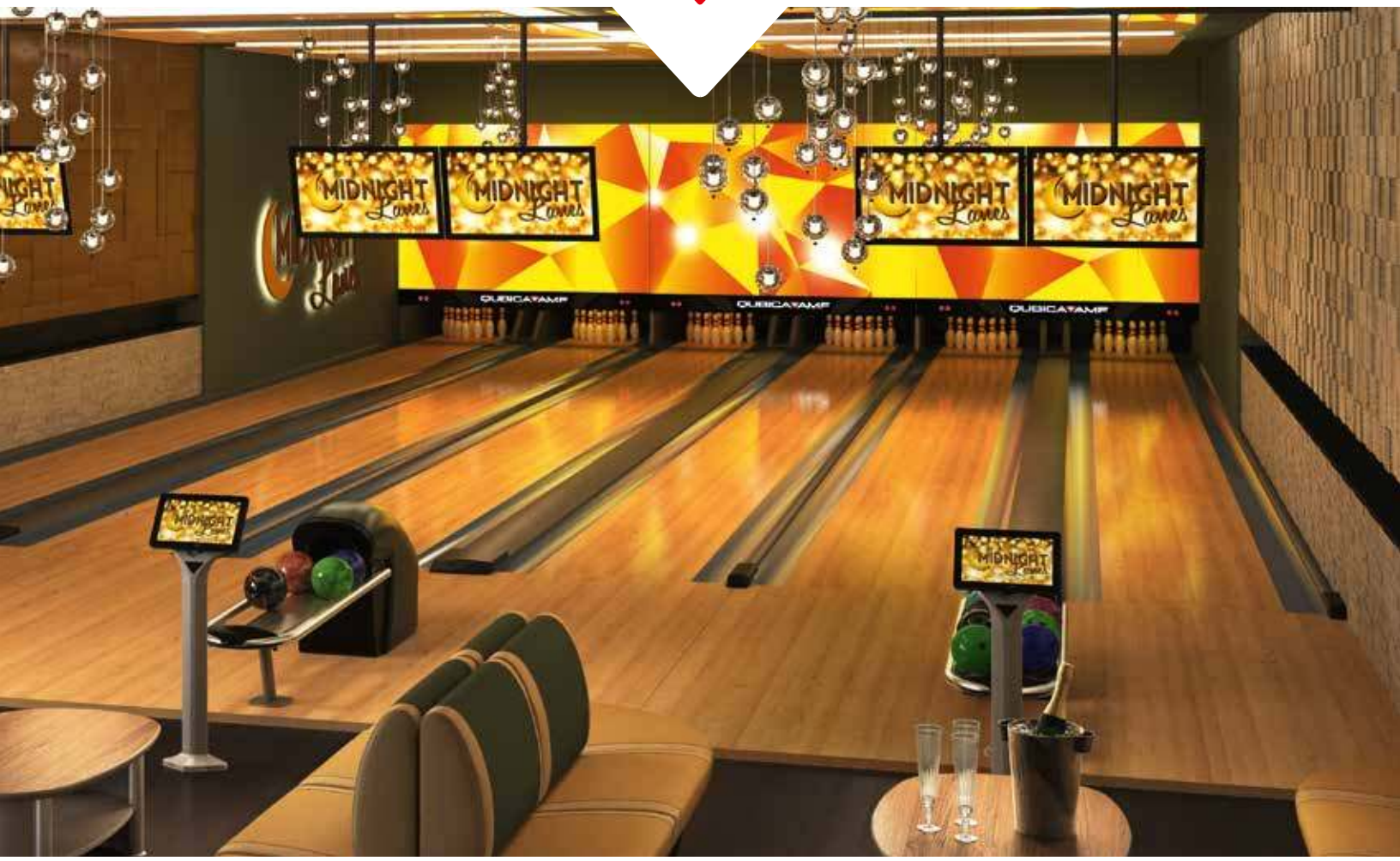

MASQ HARMONY

MASKING COLLECTION

Masking Frame Dimensions

Lower Tier Masq Unit

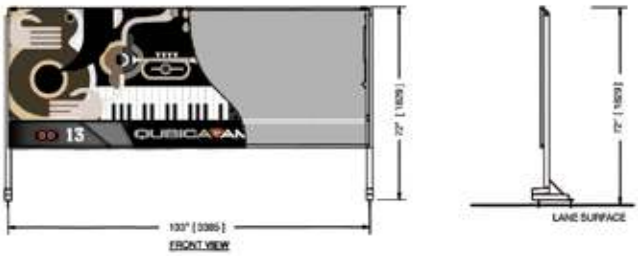

Lower and Upper Tier Masq Unit

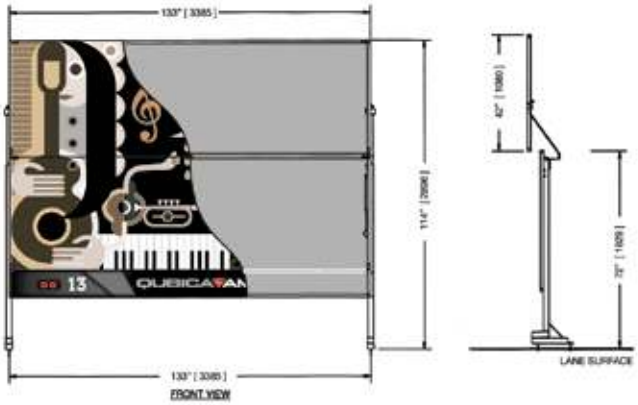

Masking Panel Design Collection

Entropy Lower

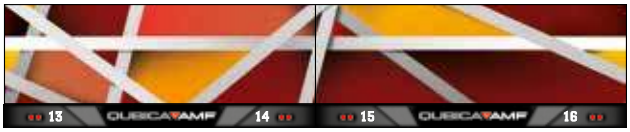

Red Lavender Green Gray

Entropy Lower and Upper

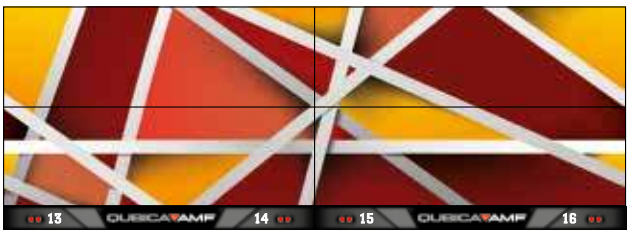

Red Lavender Green Gray

Skyline Lower

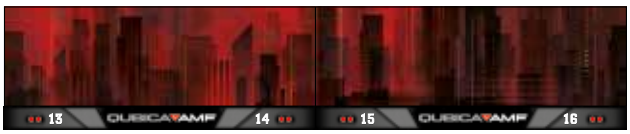

Red Blue Green

Skyline Lower and Upper

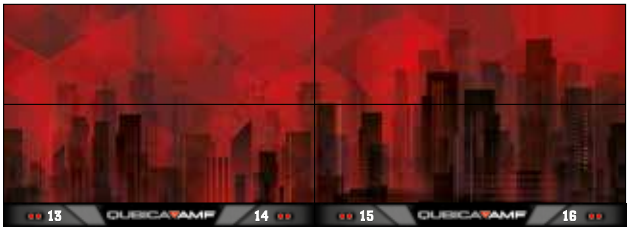

Red Blue Green

Elements Lower

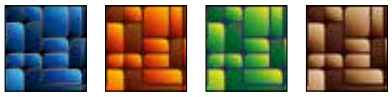

Blue Amber Green Sienna

Elements Lower and Upper

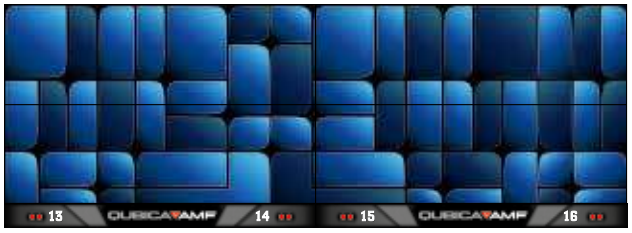

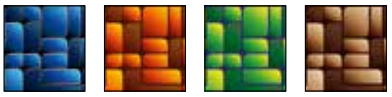

Blue Amber Green Sienna

Techno Lower

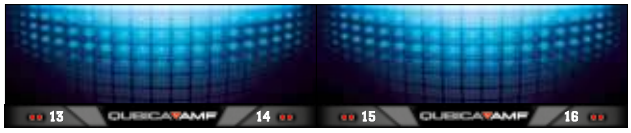

Blue Bronze Green

Techno Lower and Upper

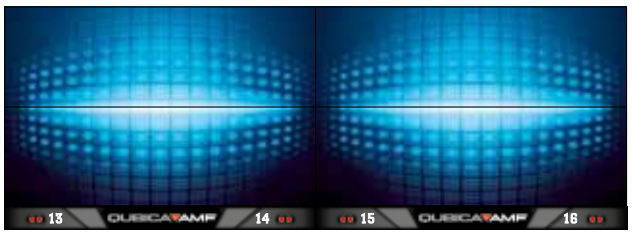

Blue Bronze Green

Maze Lower

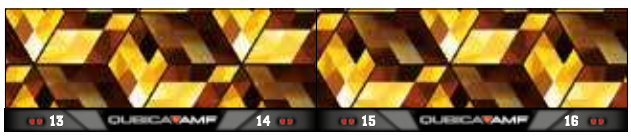

Yellow Violet Camouflage

Maze Lower and Upper

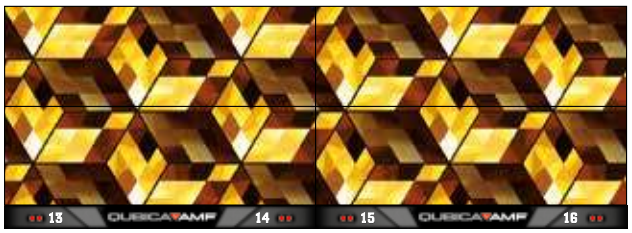

Yellow Violet Camouflage

Masking Panel Design Collection

Olympics Lower

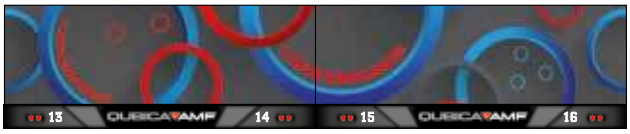

Gray

Green

Olympics Lower and Upper

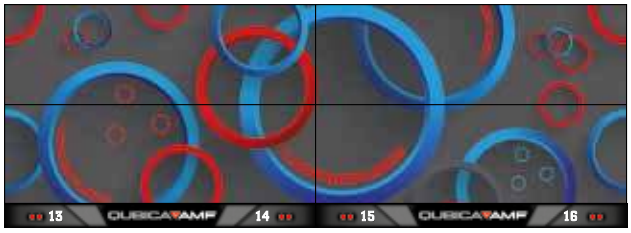

Gray

Green

Galaxy Lower

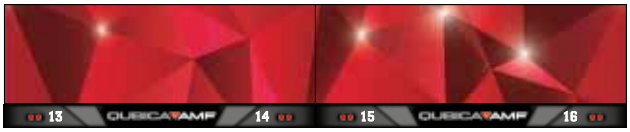

Red

Blu

Green

Lavender

Gold

Galaxy Lower and Upper

Red

Blu

Green

Lavender

Gold

Paperbowl Lower *

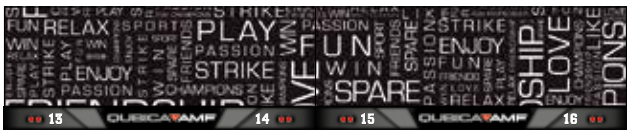

Black & White

Black & Colors

Paperbowl Lower and Upper *

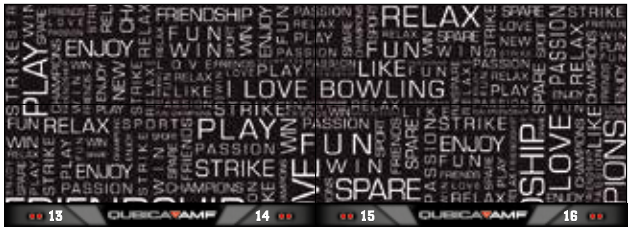

Black & White

Black & Colors

* Masking back-light system not recommended for this masking design.

Theater Lower *

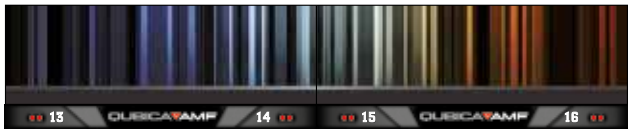

Theater Lower and Upper *

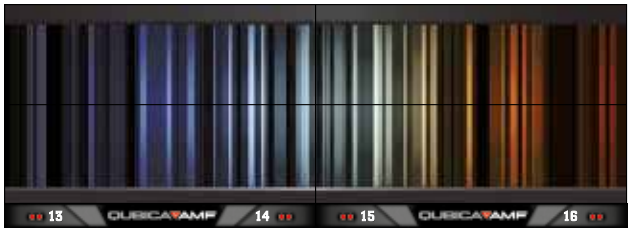

Manhattan Lower

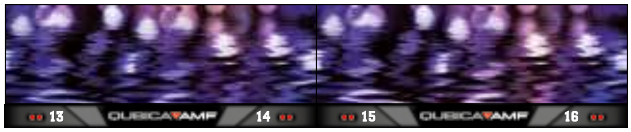

Manhattan Lower and Upper

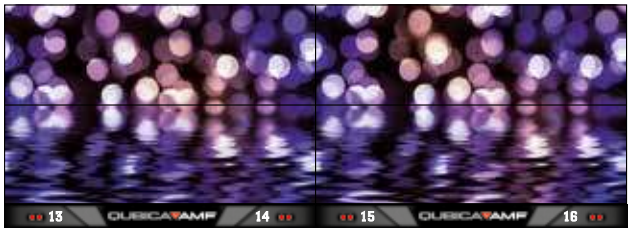

Wave Lower

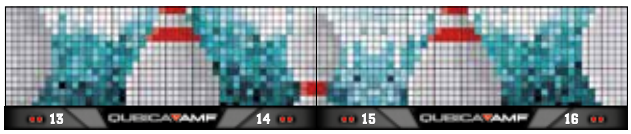

Wave Lower and Upper

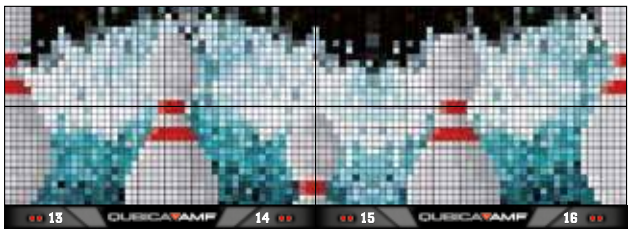

* Masking back-light system not recommended for this masking design.

Masking Panel Design Collection

Kandinsky Lower *

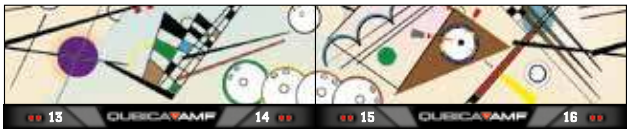

Kandinsky Lower and Upper *

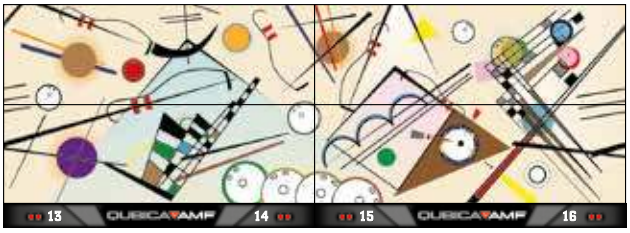

Haring Lower

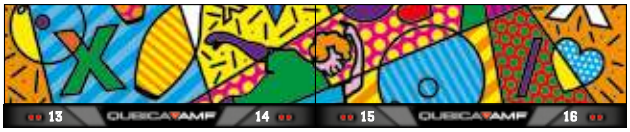

Haring Lower and Upper

Mondrian Lower *

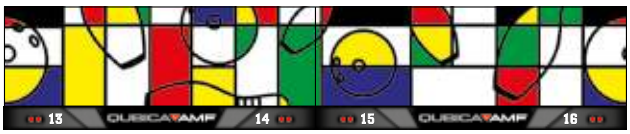

Mondrian Lower and Upper *

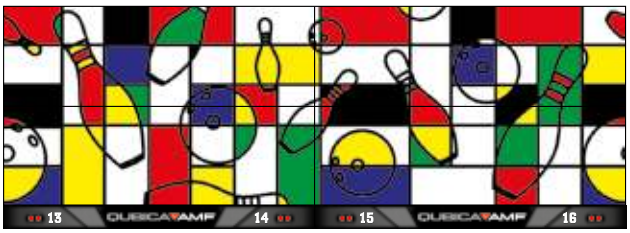

* Masking back-light system not recommended for this masking design.

Forest Lower

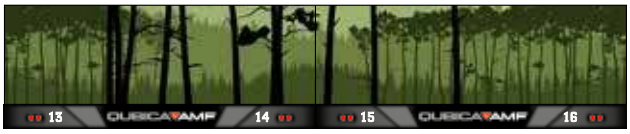

Forest Lower and Upper

Riverside

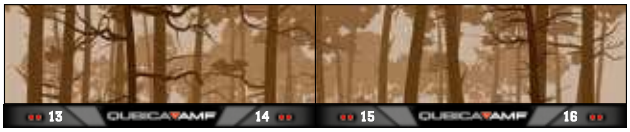

Riverside and Upper

Silkway Lower

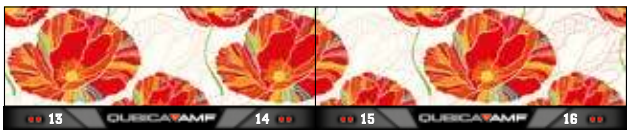

Silkway Lower and Upper

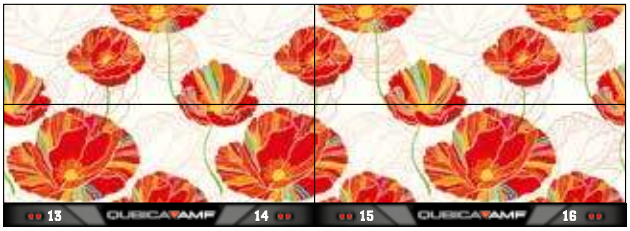

Masking Panel Design Collection

Partybowl Lower

Partybowl Lower and Upper

Memphis Lower

Memphis Lower and Upper

Chicago Lower

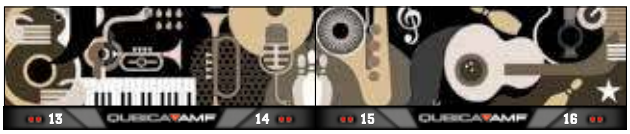

Chicago Lower and Upper

Crayon Lower

Crayon Lower and Upper

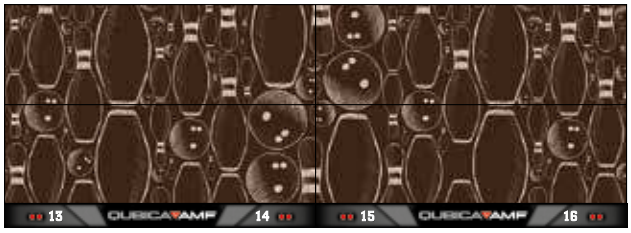

Bowlboard Lower

Bowlboard Lower and Upper

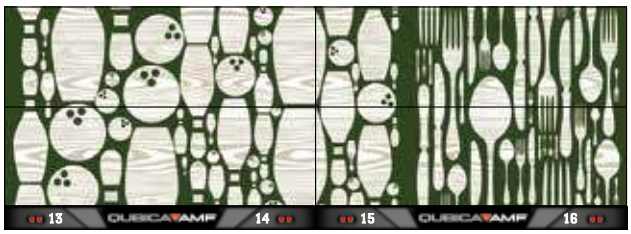

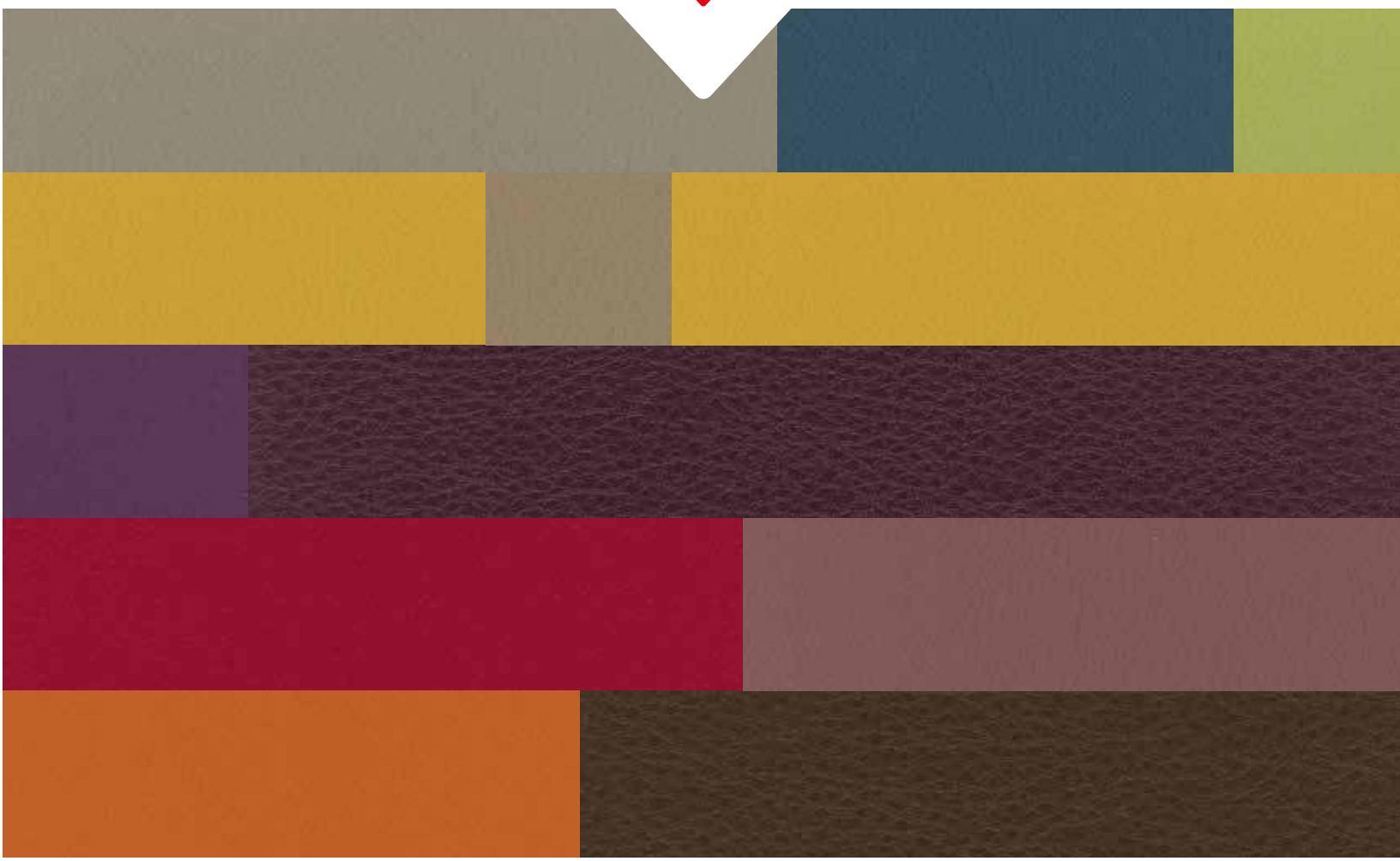

HARMONY

Color Concepts

With the Harmony Line from QubicaAMF, it's never been easier to complement the style and atmosphere of your entire center with coordinating furniture, masking graphics and ball returns.

Investing in the color concept allows you to:

- give your center a value that will make the facility "come to life";
- choose the color(s) that is right for the each space;
- compensate for issues related to artificial lighting with the appropriate selection of colors.

And, you get all of these benefits with no incremental cost.

Choose from 12 Expert Color Concepts:

Each "expert" color concept is a combination of different colors of Harmony furniture elements and hoods that delivers consonance and order, helping you to create the right look, whatever is the furniture layout that you envision for your center. Whether doing this project in-house or working with an architect or designer, there's a Harmony color combination to help you create just the right look—without starting from scratch.

Take advantage of our Color concepts and the job will be easier for you or any other facility design partners working with you.

Pop

UPHOLSTERY BACK - Sandstone

UPHOLSTERY SEAT - Huron

UPHOLSTERY ACCENT Stoneware

SOFA BASE - Slate

TABLE TOP Bittersweet

SHELF TOP Greige

CURVED LEG Greige

HARD SEAT BENCHES Royal Blue

HARD CHAIRS Royal Blue

T-MOLD Slate

Rock&Roll

UPHOLSTERY BACK - Shale

UPHOLSTERY SEAT - Sprite

UPHOLSTERY ACCENT Chervil

SOFA BASE - Slate

TABLE TOP Greige

SHELF TOP Greige

CURVED LEG Navajo Red

HARD SEAT BENCHES Greige

HARD CHAIRS Navajo Red

T-MOLD Navajo Red

Soundtrack

UPHOLSTERY BACK - Sandstone

UPHOLSTERY SEAT - Grounded

UPHOLSTERY ACCENT
Seville

SOFA BASE - Slate

TABLE TOP
Wisconsin Oak

SHELF TOP
Greige

CURVED LEG
Greige

HARD SEAT BENCHES
Slate

HARD CHAIRS
Bittersweet

T-MOLD
Bittersweet

Folk

UPHOLSTERY BACK - Flamenco

UPHOLSTERY SEAT - Flamenco

UPHOLSTERY ACCENT
Plum Dusk

SOFA BASE - Slate

TABLE TOP
Wisconsin Oak

SHELF TOP
Slate

CURVED LEG
Slate

HARD SEAT BENCHES
Wisconsin Oak

HARD CHAIRS
Wisconsin Oak

T-MOLD
Slate

Jazz

UPHOLSTERY BACK - Djon

UPHOLSTERY SEAT - Djon

UPHOLSTERY ACCENT
Portobello

SOFA BASE - Slate

TABLE TOP
Empire Mahogany

SHELF TOP
Greige

CURVED LEG
Slate

HARD SEAT BENCHES
Greige

HARD CHAIRS
Greige

T-MOLD
Greige

Disco

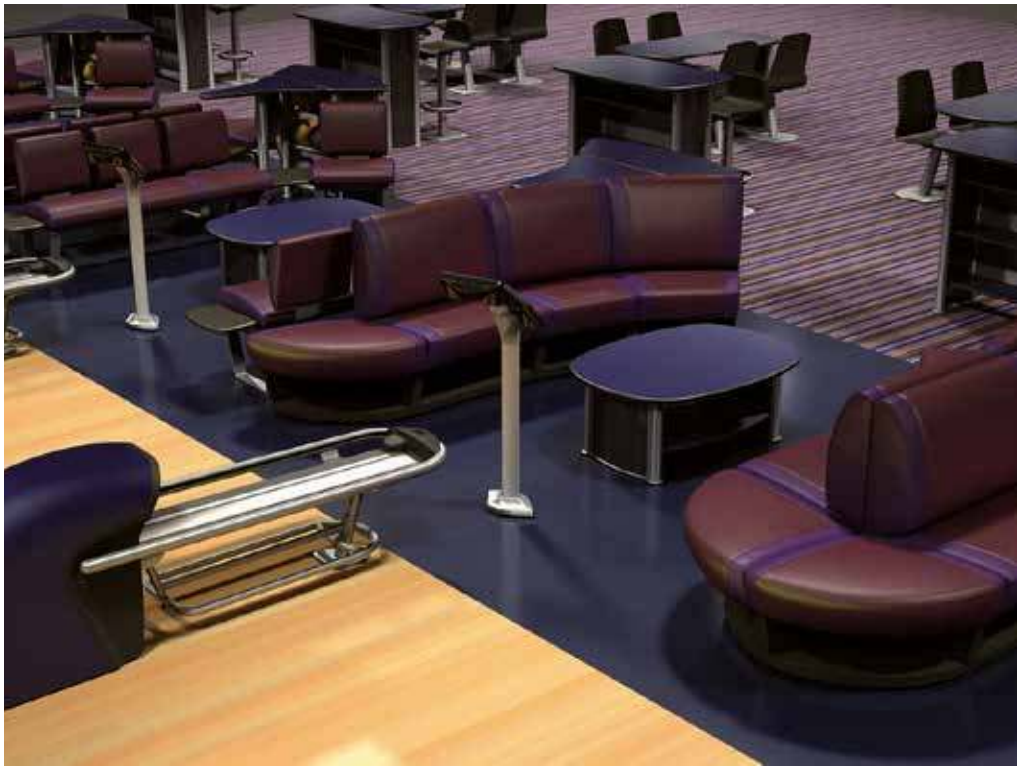

UPHOLSTERY BACK - Empire

UPHOLSTERY SEAT -Empire

UPHOLSTERY ACCENT
Wisteria

SOFA BASE - Slate

TABLE TOP
Navy Blue

SHELF TOP
Navy Blue

CURVED LEG
Slate

HARD SEAT BENCHES
Slate

HARD CHAIRS
Slate

T-MOLD
Slate

Swing

UPHOLSTERY BACK - Grounded

UPHOLSTERY SEAT - Grounded

UPHOLSTERY ACCENT
Pomegranate

SOFA BASE - Slate

TABLE TOP
Empire Mahogany

SHELF TOP
Slate

CURVED LEG
Slate

HARD SEAT BENCHES
Slate

HARD CHAIRS
Slate

T-MOLD
Slate

Hard Rock

UPHOLSTERY BACK -Keystone

UPHOLSTERY SEAT - Licorice

UPHOLSTERY ACCENT
Shale

SOFA BASE - Slate

TABLE TOP
Forsythia

SHELF TOP
Greige

CURVED LEG
Greige

HARD SEAT BENCHES
Greige

HARD CHAIRS
Greige

T-MOLD
Slate

Ambient

UPHOLSTERY BACK - Portobello

UPHOLSTERY SEAT - Doe

UPHOLSTERY ACCENT Svtoneware

SOFA BASE - Slate

TABLE TOP Empire Mahogany

SHELF TOP Slate

CURVED LEG French Blue

HARD SEAT BENCHES Greige

HARD CHAIRS French Blue

T-MOLD Slate

Blues

UPHOLSTERY BACK - Kelp

UPHOLSTERY SEAT -River Clay

UPHOLSTERY ACCENT Quarry

SOFA BASE - Slate

TABLE TOP Wisconsin Oak

SHELF TOP Wisconsin Oak

CURVED LEG Greige

HARD SEAT BENCHES Wisconsin Oak

HARD CHAIRS Wisconsin Oak

T-MOLD Greige

Country

UPHOLSTERY BACK - Maroon

UPHOLSTERY SEAT - Maize

UPHOLSTERY ACCENT
Pomegranate

SOFA BASE - Slate

TABLE TOP
Wisconsin Oak

SHELF TOP
Wisconsin Oak

CURVED LEG
Slate

HARD SEAT
BENCHES
Wisconsin Oak

HARD CHAIRS
Slate

T-MOLD
Slate

Ballad

UPHOLSTERY BACK -Nutmeg

UPHOLSTERY SEAT - Keystone

UPHOLSTERY ACCENT
Seville

SOFA BASE - Slate

TABLE TOP
Slate

SHELF TOP
Slate

CURVED LEG
Slate

HARD SEAT
BENCHES
Slate

HARD CHAIRS
Slate

T-MOLD
Slate

HARMONY Designed for bowling. Designed for you.

Exclusive Features	QubicaAMF Harmony	Other Solutions
MATCH YOUR VISION, STYLE AND CENTER NEEDS		
Three Coordinated Seating Styles - Choose from the Infinity, Synergy and Energy Collections which coordinate with the Harmony Ball Return and Masking Lines	●	o
Infinity Collection - Offers a variety of sofa shapes and sizes, or combine three modular building blocks to create endless combinations	●	o
Synergy Collection - A complete selection of upholstered seat benches, ranging from one to four seats, available in straight or curved configurations, with and without end and union tables	●	o
Energy Collection - A comprehensive set of hard seat benches, chairs and stools made on a solid metal structure with durable, easy to maintain laminate seats	●	o
Harmony Ball Return - State-of-the-art technology and electronics, compact, colorful, stylish and coordinates with the Harmony Furniture and Masking Lines	●	o
Opto-Electronic Sensing Technology - The motor runs only when the ball arrives and stops if hands or objects are inserted, improving energy efficiency and safety	●	o
Compact & Ergonomic Design - A smaller footprint minimizes congestion on the approach. The hood is designed to cover the ball exit, providing more protection for bowlers	●	o
Quick Access Hood - The hood is designed to be removed with minimal effort, making maintenance faster and easier	●	◊
Harmony Masking Collection - Unique designs to complement Harmony Furniture and Ball Return Lines	●	◊
Boutique Lanes - Now available in your choice of colors to provide another tool to help you create the "wow" factor, differentiate from your competition, and fit your center's theme and color palette	●	◊
Twelve Expert Color Concepts - Each color concept has been designed to create a harmonious effect between the furniture, masking graphics, ball returns and interiors. Each delivering a different look, experience and emotion	●	o
Three Coordinated Seating Styles and Price Levels - Infinity, Synergy and Energy seating are priced at three different levels. Mix and match elements within your center and within your budget	●	o
Turnkey Front End Solution - All front end components—all furniture elements and styles, ball returns, masking units and lanes—have been designed as a total solution that coordinate and function together	●	o
ACCOMMODATE YOUR DIVERSE CUSTOMERS' NEEDS		
Modular and Reconfigurable - Rearrange modular furniture elements as needed to create different layouts with enlarged settee allowances spanning groups of lanes. Ideal for parties, groups and events business	●	o
Sofa Lock/Unlock Mechanism and Wheels - Securely lock, easily unlock and quickly move the sofa elements as needed	●	o
Modular Coffee Table - Can easily be split into smaller personal tables or combined into different shapes	●	o
On-Lane Wedge Table - Uniquely fits in between the back of Infinity sofas or Synergy and Energy benches to store house balls or bowlers' personal items	●	o
Arrow Table - Designed to fit between the back of Infinity sofas, together with the wedge table, or can serve as a personal table	●	o
Smart Integrated Storage - Personal items can be accommodated under the sofa or bench seating or under the coffee table, on-lane wedge table or concourse table with optional shelving	●	o
Comfort-Focused Design - Seating is made of a properly balanced soft material and designed with optimized backs and angles for ease of getting up to bowl	●	o
MAKE MAINTENANCE EASY AND COST EFFECTIVE		
Replaceable Upholstered Items - Upholstered items like seats and backs of Infinity and Synergy Collections are removable	●	◊
Synthetic Seat Material - The Energy Collection seats are made of a laminate material rather than plastic or wood	●	o
Cleanable, Stain-Resistant Surfaces - All Harmony surfaces are dirt- and stain-resistant	●	◊
Highest Grade Upholstery - Infinity and Synergy upholstered fabric choices are commercial grade	●	◊
Conformance to Fire and Structural Regulations - Builts in compliance with ANSI BIFMA standards and with CAL-133* and EN1021-1/ EN1021-2 flammability requirements	●	◊

● **Exclusive**

◊ **Available in some systems provided by other companies**

O **Not Available**

*CAL-133 is available as option

"US patents pending for elements of the Harmony, Infinity, Synergy and Energy lines of furniture"

CAT-HTS-2019

Technical specifications subject to change without notice - Images shown are for illustration purpose only and may differ from actual products

QUBICAAMF

WORLDWIDE HEADQUARTERS
8100 AMF Drive - Mechanicsville, VA 23111 - USA - Tel. +1 (804) 569-1000 - Fax: +1 (804) 559-8650 - Toll free 1-866-460-QAMF (7263)

EUROPEAN HEADQUARTERS
Via della Croce Coperta, 15 - 40128 Bologna - Italy - Tel.+39 (051) 4192-611 - Fax +39 (051) 4192-602

www.qubicaamf.com - info@qubicaamf.com