TEQ SMART

INDOOR/OUTDOOR

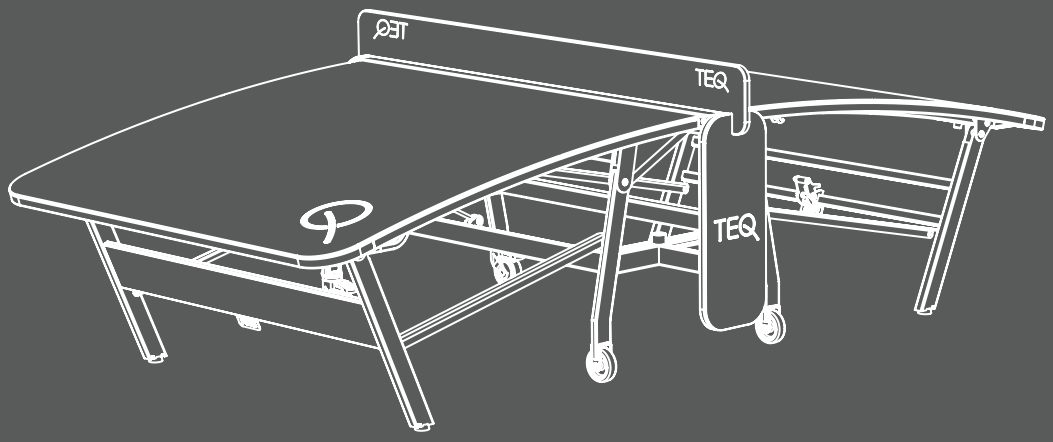

OWNER'S MANUAL

INFORMATION FOR USERS

English (EN)

Before using or assembling the product read the document very carefully. Please keep the manual as you may need the included information in the future. The product is under international patent, trademark and copyright protection. If you cannot find the instructions in your language please visit www.teqball.com

SPECIFICATIONS OF THE PRODUCT
Unfolded dimensions:
3000x1700x900 [mm]
Total weight: max 168 kg
Folded dimensions: 760x1700x1800 [mm]

CONTACT: Teqball International Limited
Street: Expo tér 5-7
City: Budapest
Country: Hungary
Postal code: 1101

The product can be used by wheelchair users.

This product is certified by:

2001/95/EC General Product Safety Directive
EN 14468-1:2015 (where relevant)

UL LISTED

FITEQ

SAFETY AND WARNINGS

Please, follow closely these instructions when assembling the table; warranty claims are not valid if the assembly is faulty. TEQ Smart table is a specially designed piece of sports equipment and it is not suitable for any other purposes.

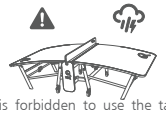

It is forbidden to use the table in extreme weather conditions (storm, lightning, under -20 and above +40 degrees Celsius).

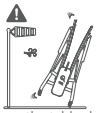

Please store the table sheltered from the wind as otherwise accidents can happen.

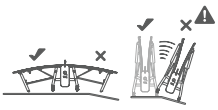

It is forbidden to keep the table on sloping ground either folded or unfolded.

It is forbidden to jump, stand, sit or lean on the table.

Do not wear jewellery or watch during the assembly or playing.

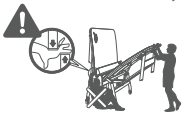

Do not touch the moving elements during moving or folding up/down the table.

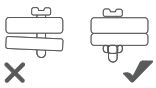

Do not use with missing components.

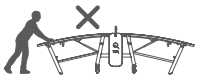

It is forbidden to move the table in unfolded position.

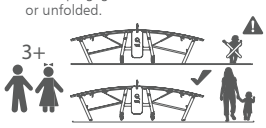

Do not leave children unsupervised around the table (including setting-up and storing periods as well). Not allowed under age of 3.

It is forbidden to store the table without locking the wheel.

If the security label with the serial number is damaged or removed, the warranty is invalid!

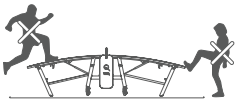

It is forbidden to jump on or kick the table.

HANDLING & MAINTENANCE

The TEQ Smart table must be set up properly. This is not only for better gameplay experience but also for your safety. Please follow these instructions:

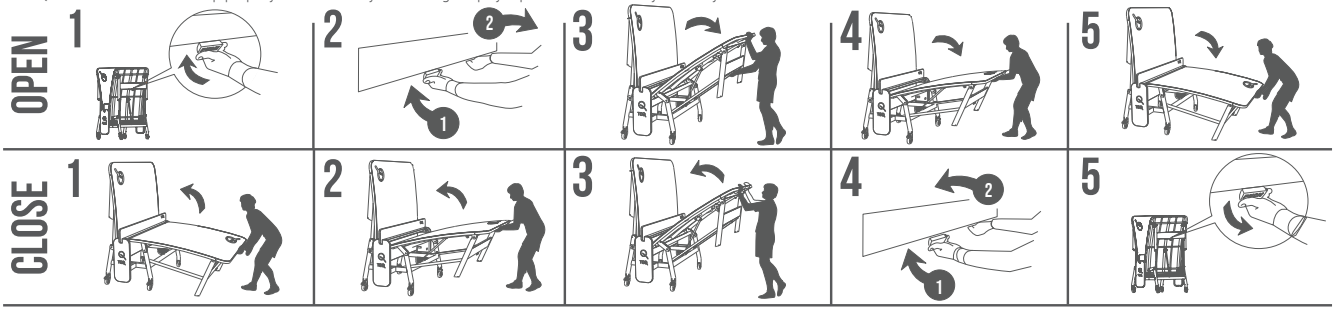

Clean the surface with warm water and use a mop (DO NOT use any abrasive sponges). Regular maintenance is essential to keep the TEQ Smart table safe and reliable. Before each use, visually inspect the TEQ Smart table to ensure that the product is usable (all part are intact, free from deformation, cracks and fractures). At least twice a month check all screws, nuts to ensure that they function properly (it is recommended to check the bolts more frequently in regular use). The fasteners are coated with adhesive which acts during the first assembly. The adhesive can prevent the self-loosening of the fasteners, in case of disassembly the adhesive loses its functionality. Please do not remove the adhesive from the fasteners. During the periods when your TEQ Smart is out of use, it is recommended to fold up the tabletops, cover the product and store it indoors. This way you will have a better chance to avoid weather-caused damages such as fading of the tabletop or corrosion of the steel structure. Replacing any component with an improper part makes the table unsafe. Always use original TEQ Smart components for replacements! In case of any question please contact us on support@teqball.com

TEQBALL PRODUCT WARRANTY (EU,US)

Teqball is proud to provide the following warranty (the "Warranty") on its high quality products to its consumer Customers, beyond any other legal remedies or warranties that they may have under applicable law:
Risks/costs covered by the Warranty: latent product defects relating to materials and/or workmanship; shipping, packaging, handling and customs fees relating to product repair or replacement; repair costs;
Risks/costs excluded from the Warranty: product surface damage (except paint damage or rust caused by manufacturing defects, which are covered) ; damage caused by misuse, neglect, accident; damage caused by not following any instruction in the Owner's Manual; normal wear and tear; damage suffered in transport; damage suffered during or after a repair or installation by unlicensed third parties; potential, indirect, incidental, special, punitive or consequential damage, even if informed of the possibility of such beforehand;
Warranty period: 2 (two) calendar years from date of delivery to the Customer; **Warranty claim window:** unless otherwise specified in applicable law, 10 (ten) calendar days from the date damage was noticed or should have been noticed; **Proof of claimed damage or costs:** photo or video of damage accompanied by photo of serial number; costs substantiated by written documentation; **Format of warranty claim:** email to support@teqball.com or fax to +353 (85) 748 5613, including (a) proof of claimed damage or costs, (b) proof of purchase including date of purchase, and (c) proof of resale if resold to another consumer;
Remedy of warranty claim: within 20 business days of receipt of a valid warranty claim, Teqball shall provide, at the Customer's option and at Teqball's expense, either (1) a full refund of the purchase price to Customer's bank account located in the country of purchase, (2) replacement with a table in the same range shipped to Customer's address located in the country of purchase or (3) repair or replacement of a damaged part (at Teqball's discretion). In each case, Teqball may reclaim the damaged table or part.
Claims after warranty period: beyond the warranty period, Teqball provides quality repair services through its network of certified professionals, at the Customer's cost.
No distributor or agent may vary the terms of this Warranty. If the terms of this Warranty contradict the terms of a sales contract entered into by Teqball, the conditions specified in such contract shall prevail.

PRODUCT LIABILITY

The Teqball product you have purchased (the "Product") is manufactured to the highest industry and safety standards (including EN 14468-1:2015; UL 962) and Teqball constantly performs quality and safety testing to ensure that these standards are maintained or exceeded. Nevertheless, no product, especially one with heavy or moving parts, is completely risk free.
SERIOUS INJURY OR DEATH MAY RESULT FROM NOT FOLLOWING THE INSTRUCTIONS IN THE OWNER'S MANUAL. IN WHICH CASE TEQBALL AND ITS ASSOCIATED ENTITIES AND PERSONNEL DECLINE ALL LIABILITY!
IN ALL CIRCUMSTANCES, AND TO THE FULLEST EXTENT ALLOWED BY APPLICABLE LAW, TEQBALL'S LIABILITY RELATING TO DIRECT DAMAGE SUFFERED IN RELATION TO THE PRODUCT SHALL BE LIMITED TO (1) $100,000 (ONE HUNDRED THOUSAND USD) OR (2) ACTUAL SUBSTANTIATED DAMAGES, WHICHEVER IS LOWER.
NO LIMITATION OF LIABILITY SHALL APPLY TO INJURY OR DEATH CAUSED BY TEQBALL'S GROSS NEGLIGENCE OR TO ANY OTHER DAMAGE THAT MAY NOT BE LIMITED BY APPLICABLE LAW.
IN ALL CIRCUMSTANCES, AND TO THE GREATEST EXTENT ALLOWED BY APPLICABLE LAW, TEQBALL DECLINES ALL POTENTIAL, INDIRECT, SPECIAL, INCIDENTAL, PUNITIVE OR CONSEQUENTIAL DAMAGE SUFFERED IN RELATION TO THE PRODUCT, EVEN IF INFORMED OF THE POSSIBILITY OF SUCH BEFOREHAND.
Any liability claim must be substantiated by documentary evidence recorded within 5 calendar days of sustaining the damage and submitted to legal@teqball.com (or by fax to +353 (85) 748 5613) within 10 business days of the same date, unless longer claim windows are provided by applicable law.

PICTOGRAM DESCRIPTION

Keep horizontal

Tighten completely (7 Nm)

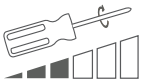

Stop halfway (2 Nm)

x2

Repeat on both sides

ENVIRONMENT

The packaging is made entirely of recyclable materials, which you may dispose of at local recycling facilities. Contact your local refuse disposal authority for more details of how to dispose of your worn-out product.
To help protect the environment, please dispose of the product properly when it has reached the end of its useful life and not in the household waste. Information on collection points and their opening hours can be obtained from your local authority.

C1 **1x**

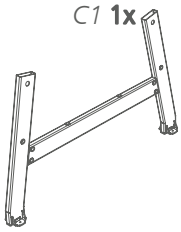

C2 **1x**

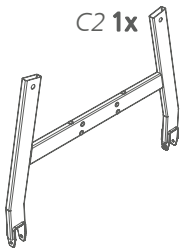

C3 **1x**

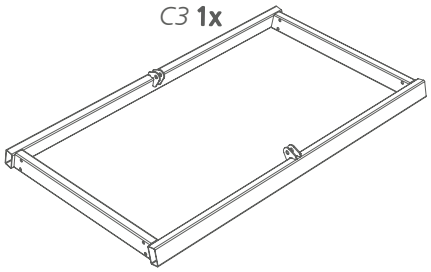

C4 **4x**

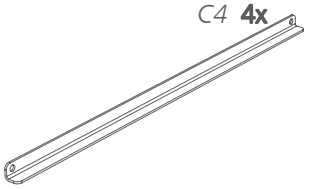

C5 **2x**

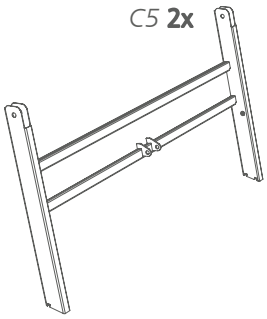

C6 **2x**

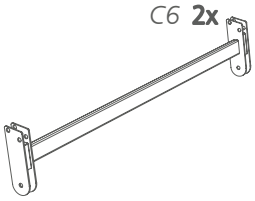

C7 **2x**

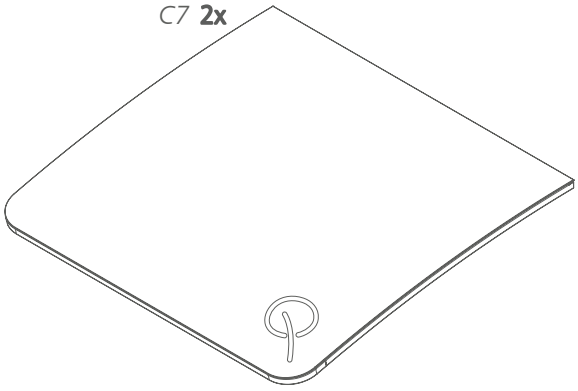

C8 **2x**

C9 **2x**

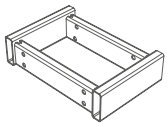

C10 **2x**

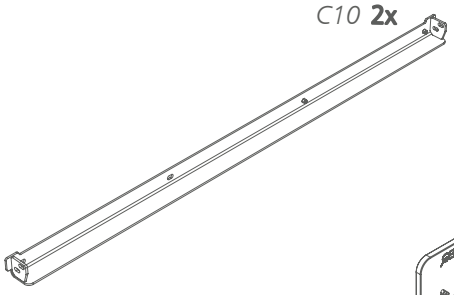

C11 **1x**

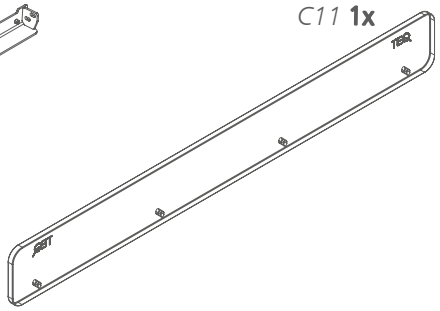

C12 **4x**

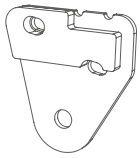

C13 **4x**

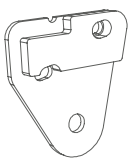

C14 **4x**

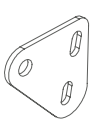

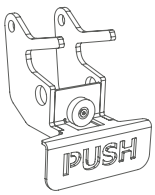

C15 **2x**

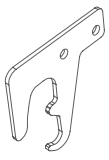

C16 **4x**

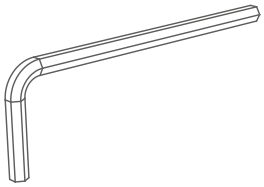

⊖6

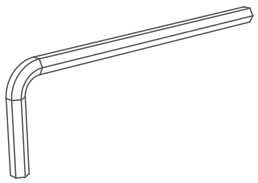

⊖5

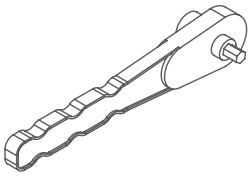

⊖5

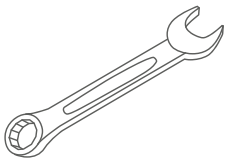

⊖13

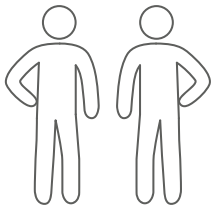

8x *F1*

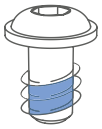

blue (turquoise) M8x20

32x *F2*

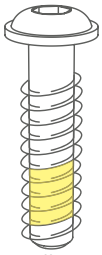

yellow M8x40

16x *F3*

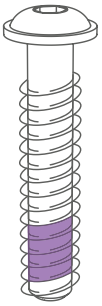

purple M8x45

4x *F4*

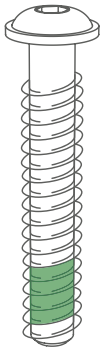

green M8x50

24x *F5*

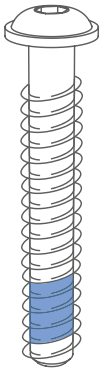

blue (turquoise) M8x55

2x *F6*

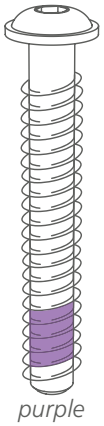

purple M8x70

2x *F7*

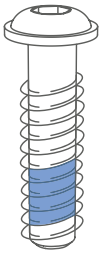

blue (turquoise) M10x40

4x *F8*

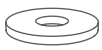

M8

40x *F9*

M8

2x *F10*

D10

D15xD10.3x20

A1
8x

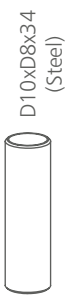

D10xD8x34 (Steel)

A2
4x

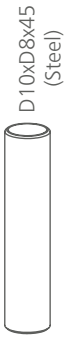

D10xD8x45 (Steel)

A3
4x

D10xD8x28 (Steel)

A4
12x

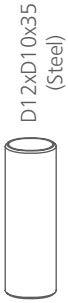

D12xD10x35 (Steel)

A5
2x

D12xD10x6

A7
32x

D13xD10x15

A8
8x

D14xD12x10

A9
12x

20x20x16.5

A10
4x

60x20x19.5

A11
4x

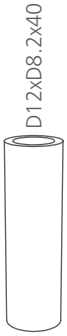

D12xD8.2x40

A12
2x

D12xD8.2x25

A13
2x

A14
2x

A15
2x

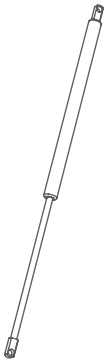

A16
2x

D18xD8.2x40

A17
2x

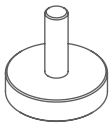

D35x8x25

A18
4x

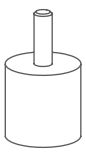

D20x13.5

A19
4x

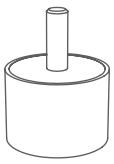

D40x28

A20
4x

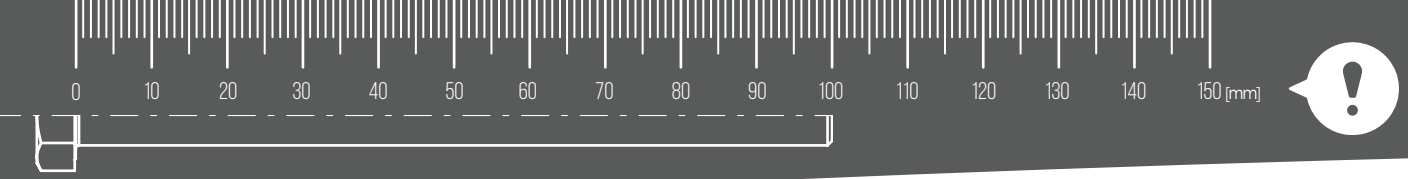

1. x2

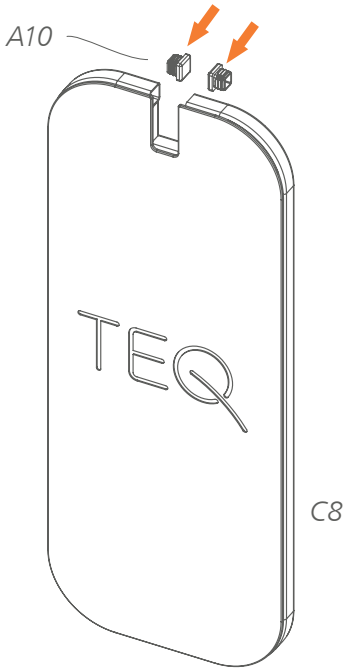

Σ

A10 x4

C8 x2

2. x2

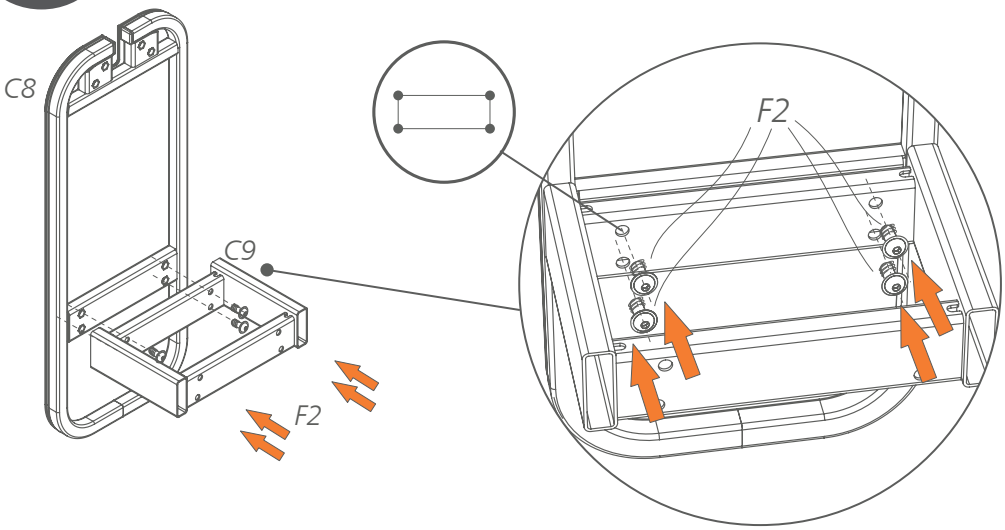

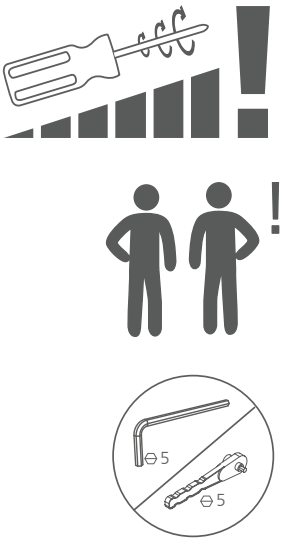

Σ

F2 x8

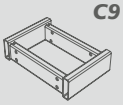

C9 x2

3.

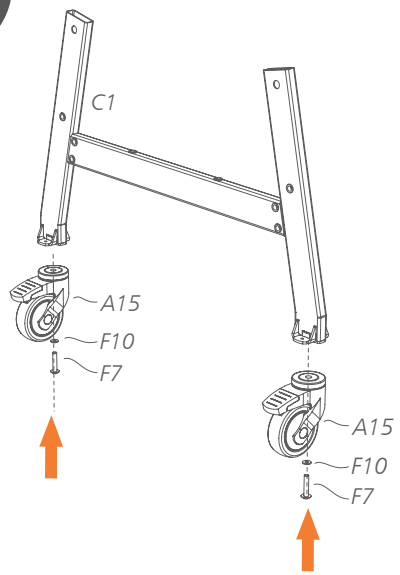

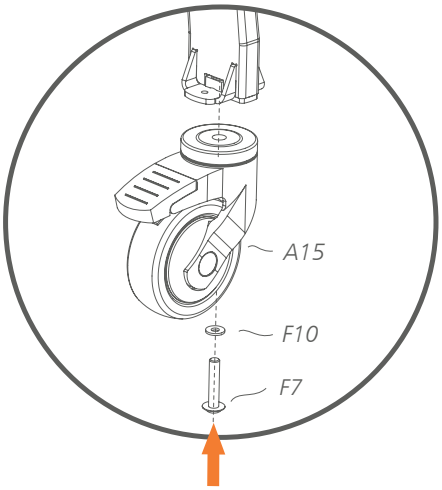

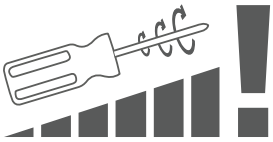

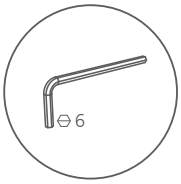

Σ

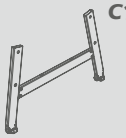

C1 x1

A15 x2

F10 x2

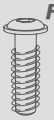

F7 x2

4.

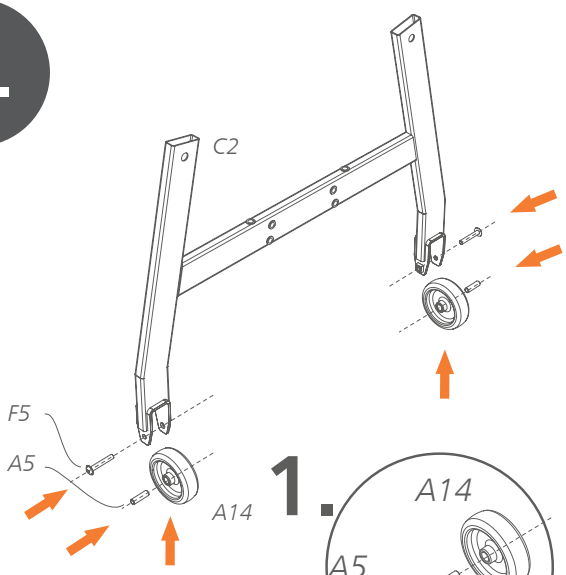

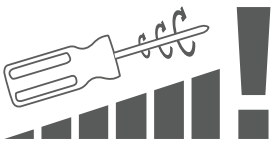

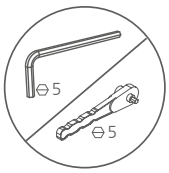

1.

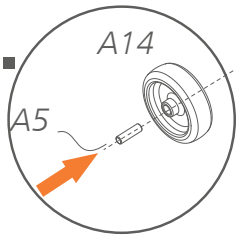

2.

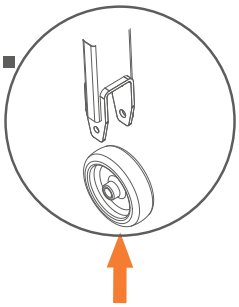

3.

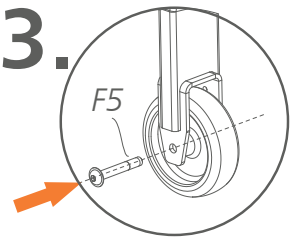

Σ

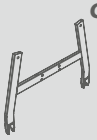

C2 x1

F5 x2

A5 x2

A14 x2

5.

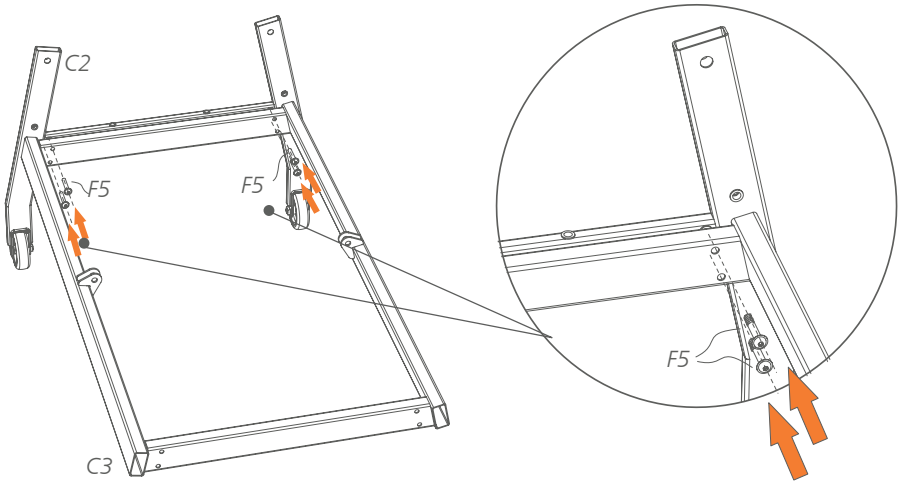

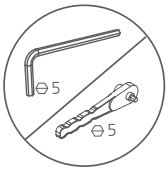

Σ

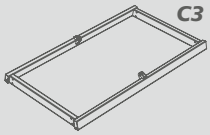

C3 x1

F5 x4

6.

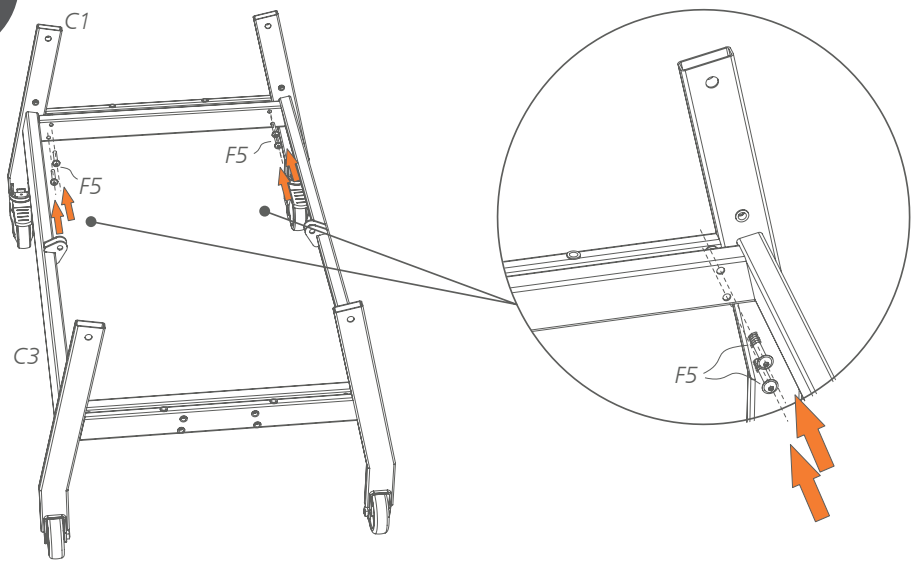

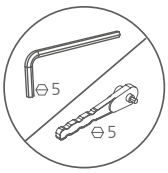

Σ

F5 x4

7.

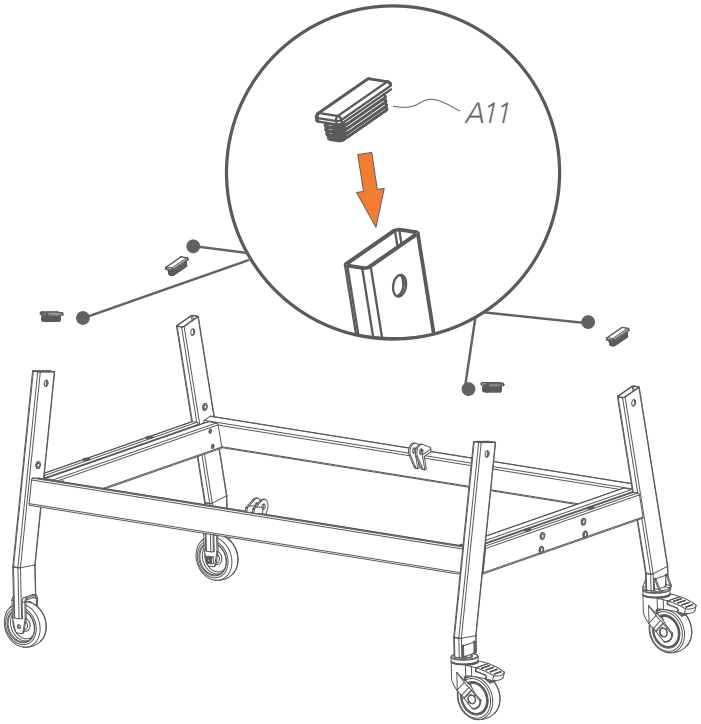

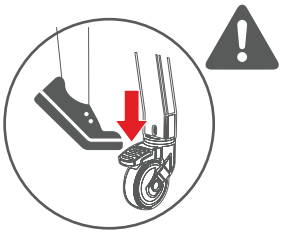

Σ

A11 x4

8. x2

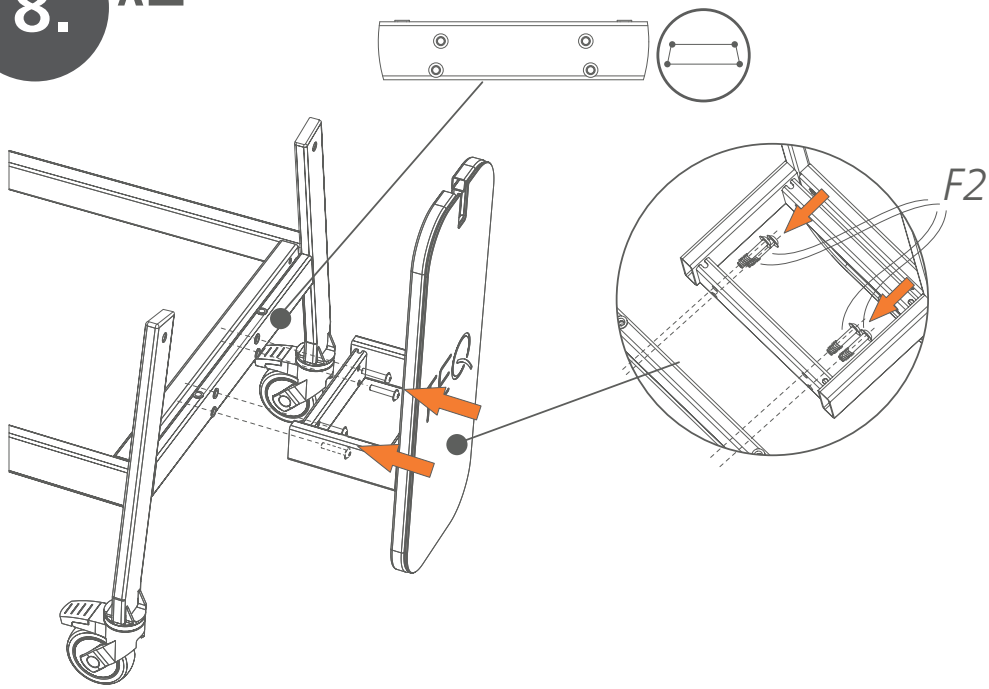

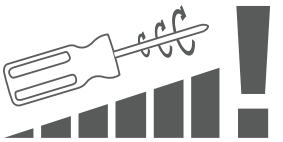

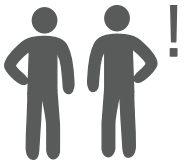

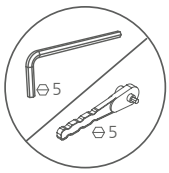

Σ

F2 x8

9.

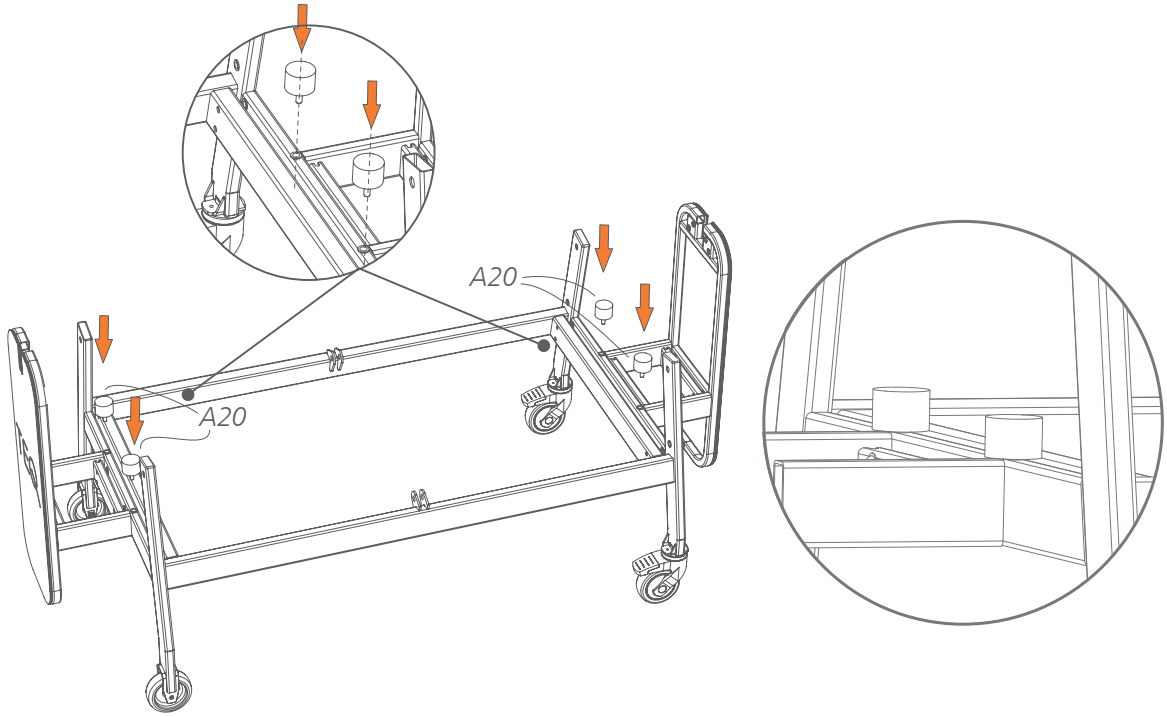

A20 x4

10. x2

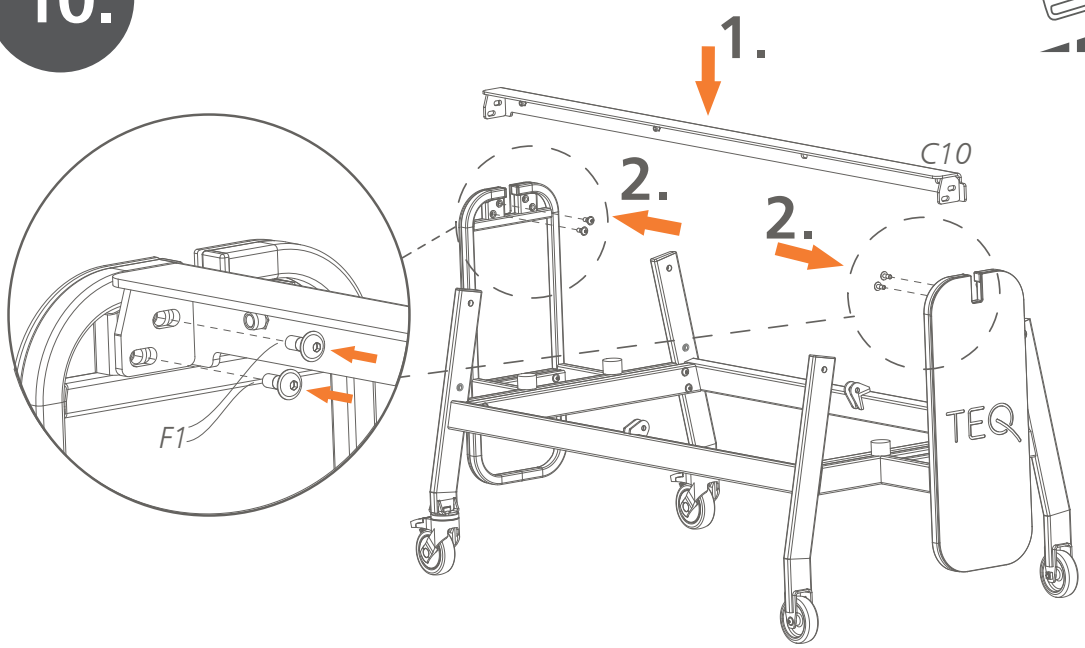

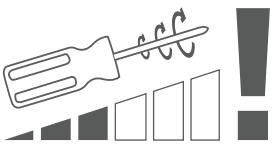

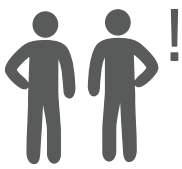

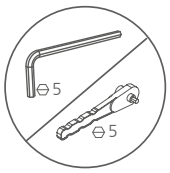

C10 x2

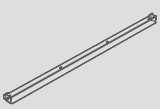

F1 x8

11.

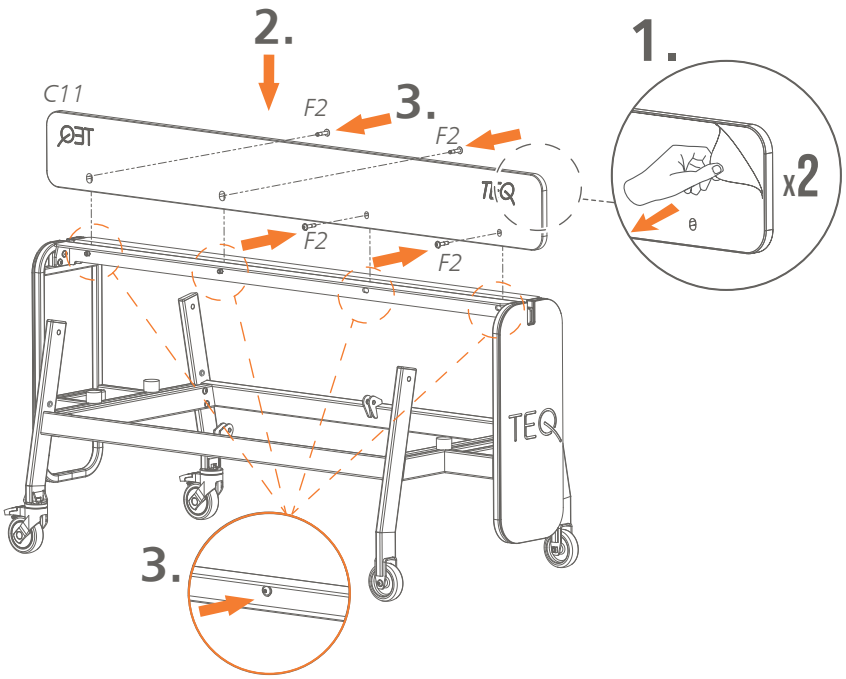

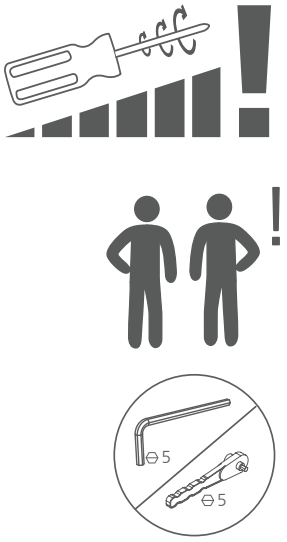

Σ

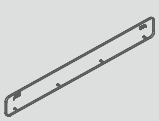

C11 x1

F2 x4

12. x2

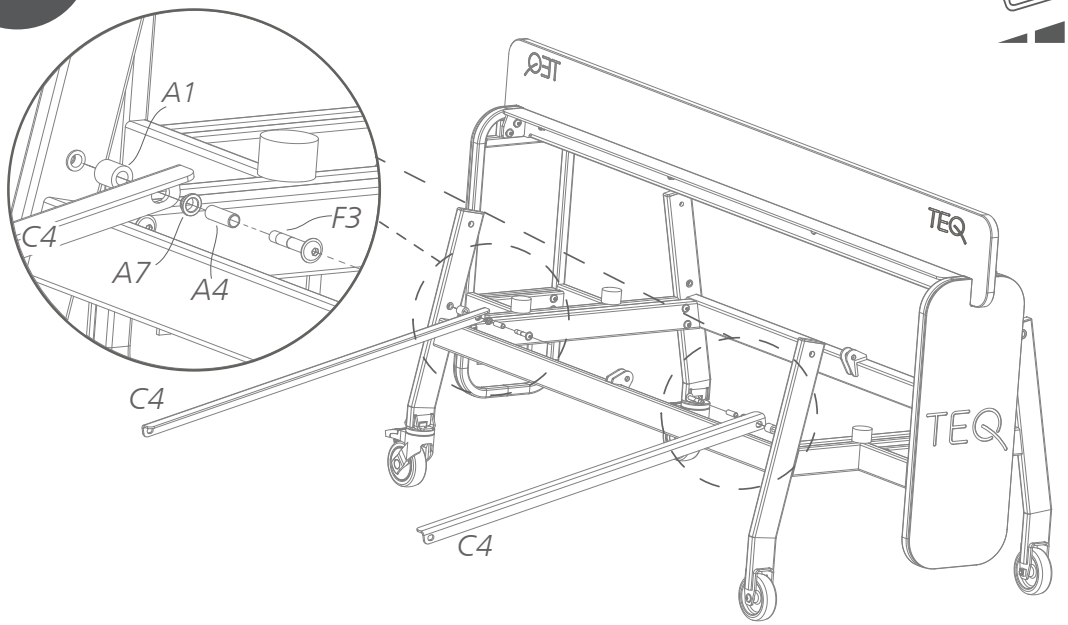

Σ

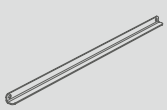

C4 x4

A1 x4

A7 x4

A4 x4

F3 x4

13. x2

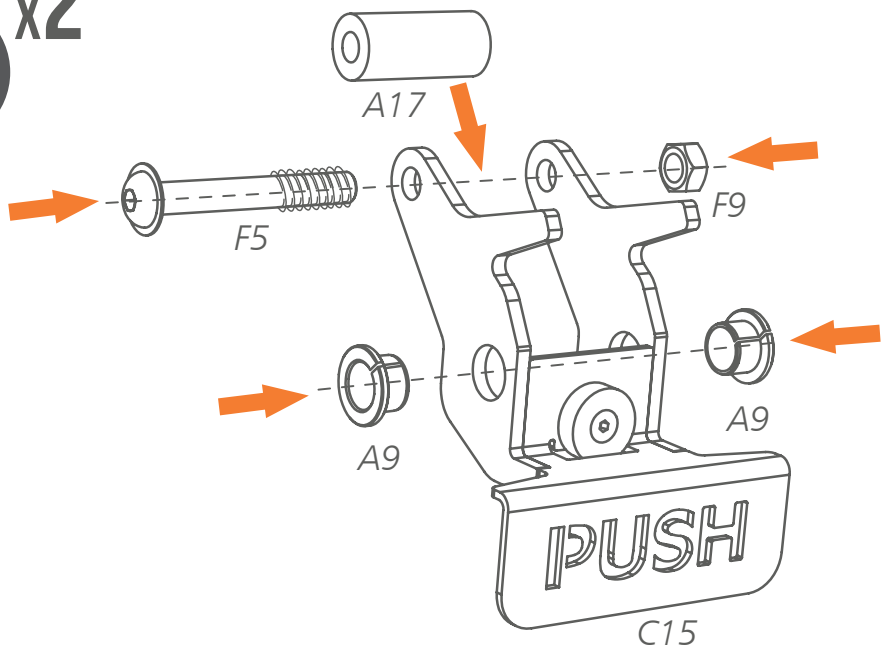
A17
F5
F9
A9
A9
PUSH
C15

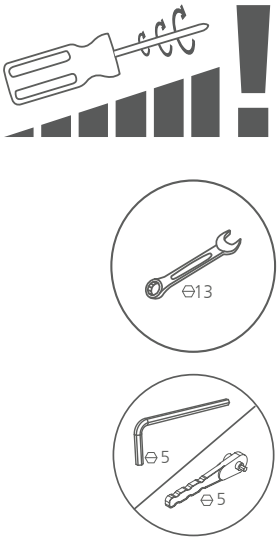
13
5
5

Σ

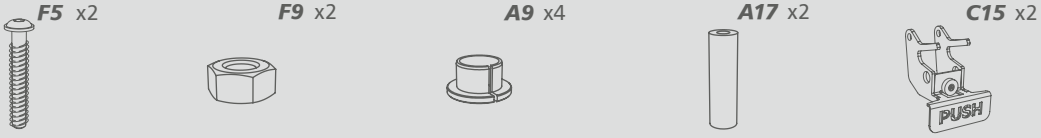
F5 x2
F9 x2
A9 x4
A17 x2
C15 x2
PUSH

14. x2

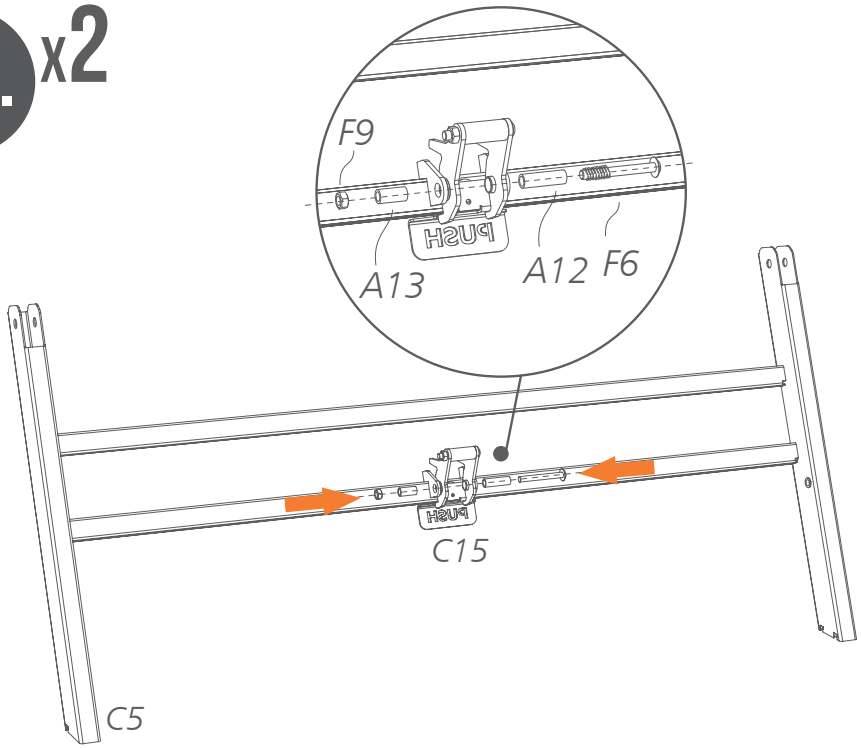
F9
A13
A12
F6
PUSH
C15
C5

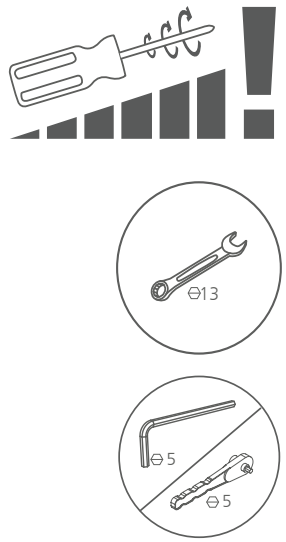
13
5
5

Σ

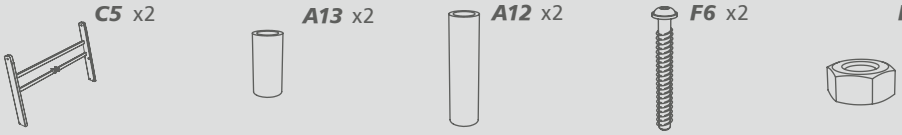
C5 x2
A13 x2
A12 x2
F6 x2
F9 x2

15. x2

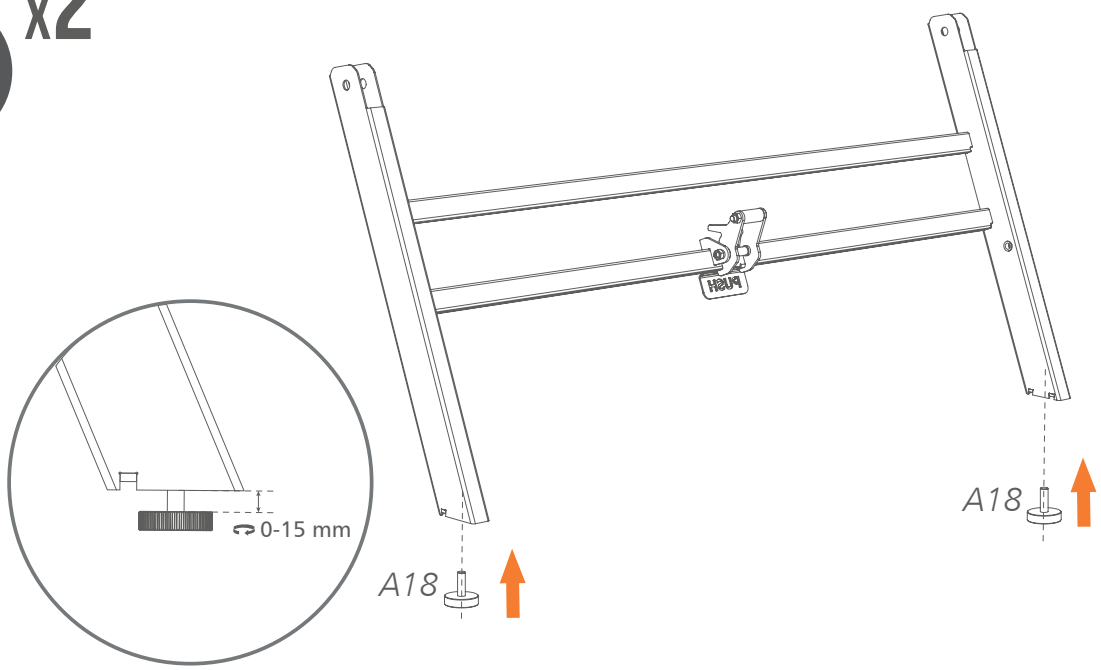

Σ

A18 x4

16. x2

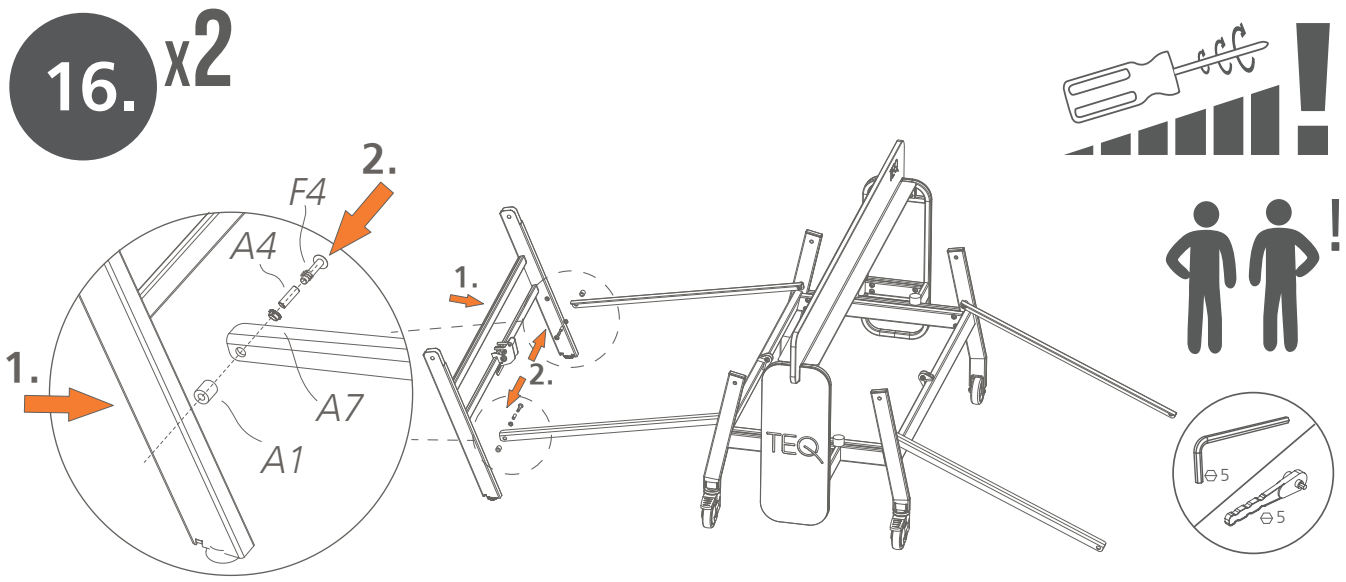

Σ

F4 x4

A4 x4

A7 x4

A1 x4

17. x2

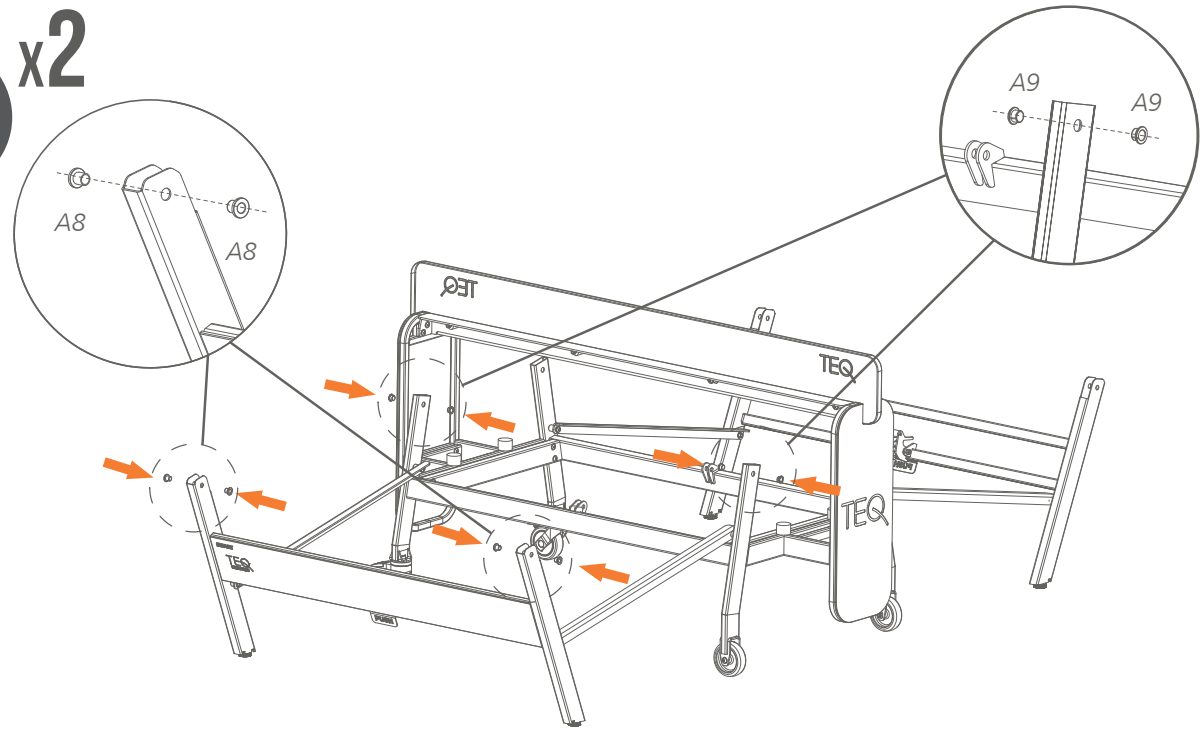

Σ

A8 x8

A9 x8

18. x2

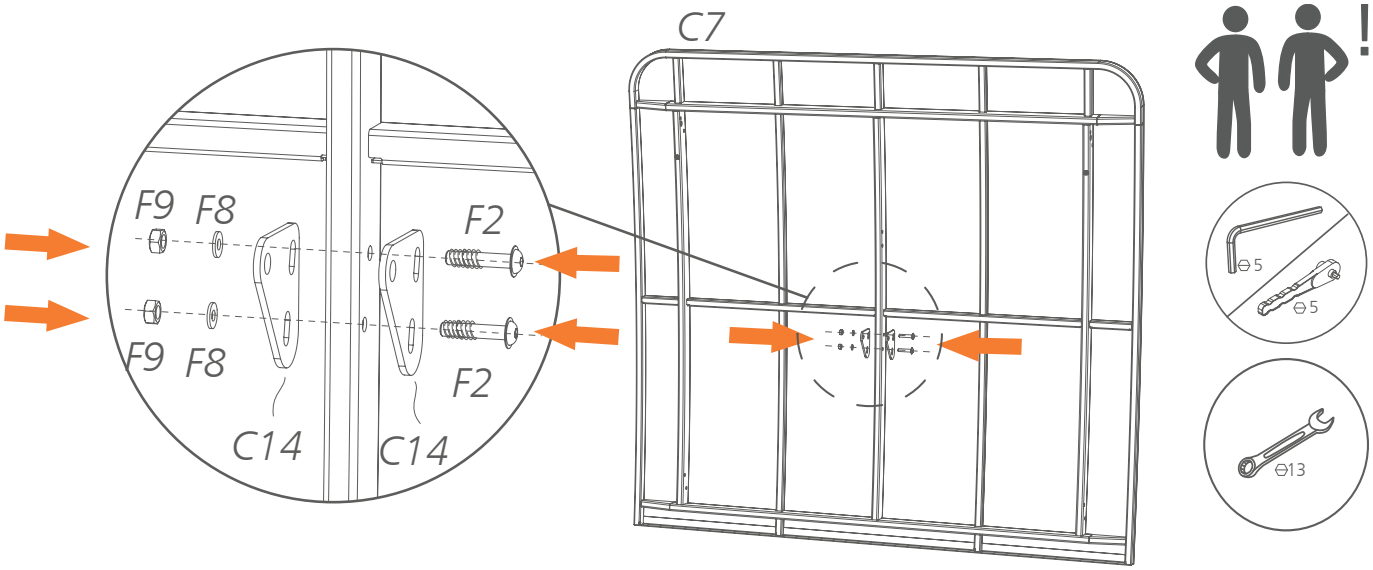

Σ

F9 x4

F8 x4

F2 x4

C14 x4

C7 x2

19. x2

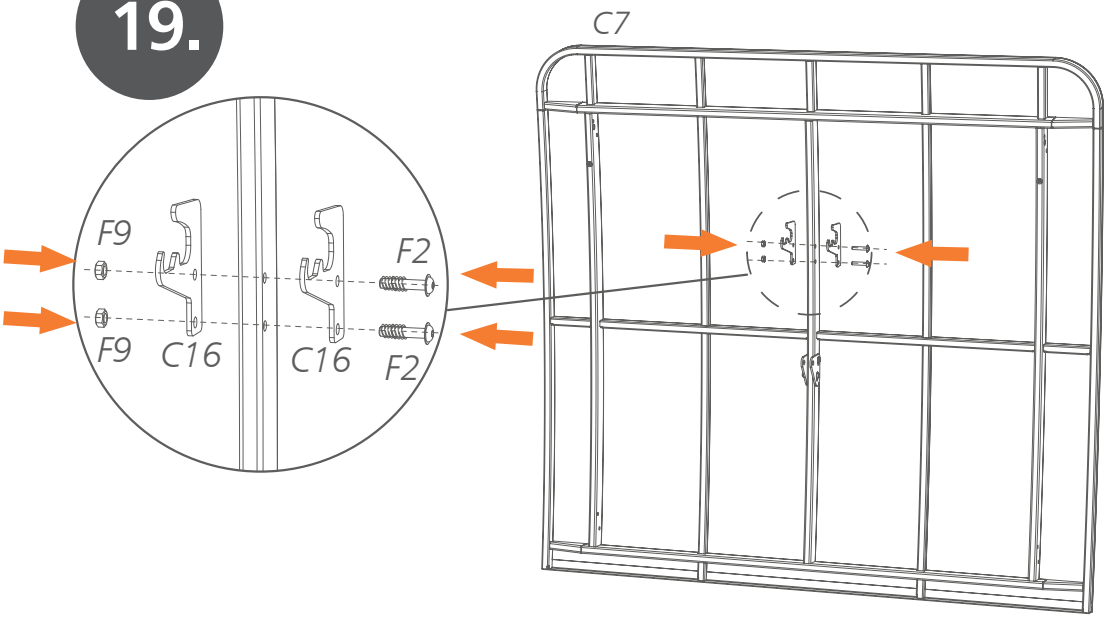

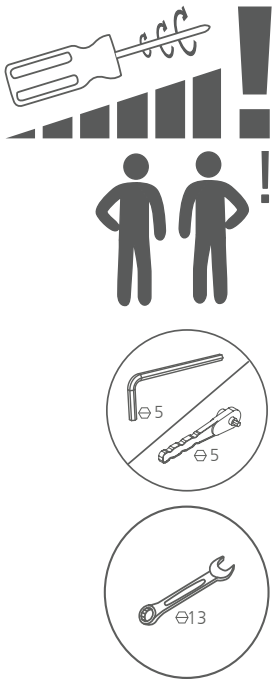

Σ

F9 x4

F2 x4

C16 x4

20. x2

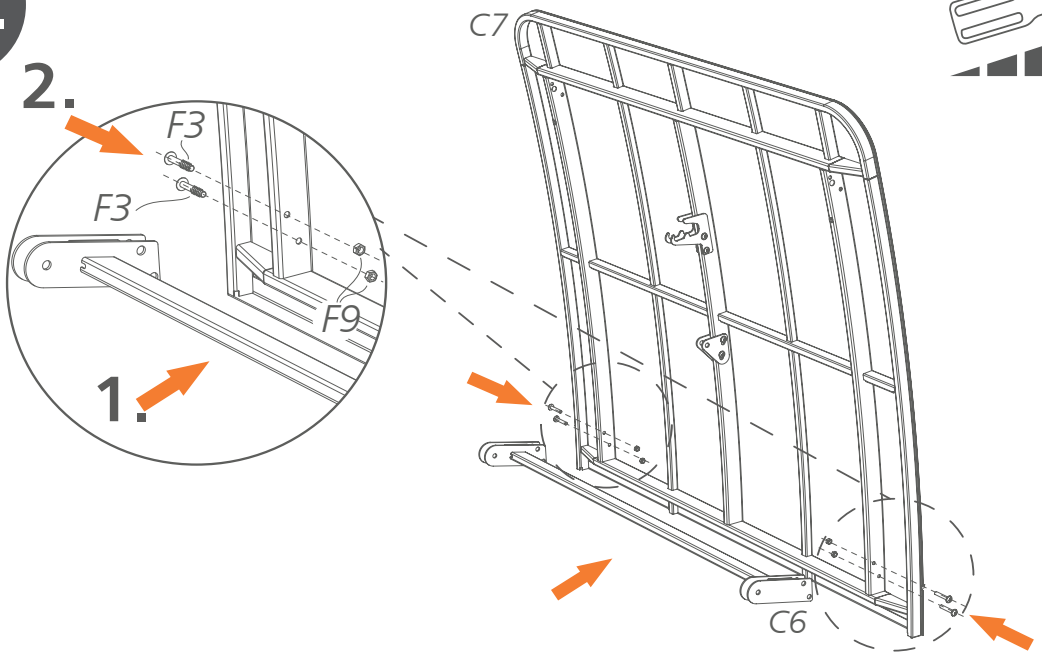

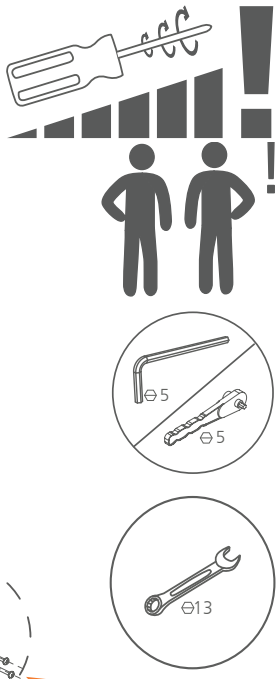

Σ

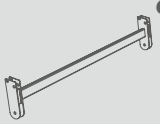
C6 x2

F9 x8

F3 x8

21. x2

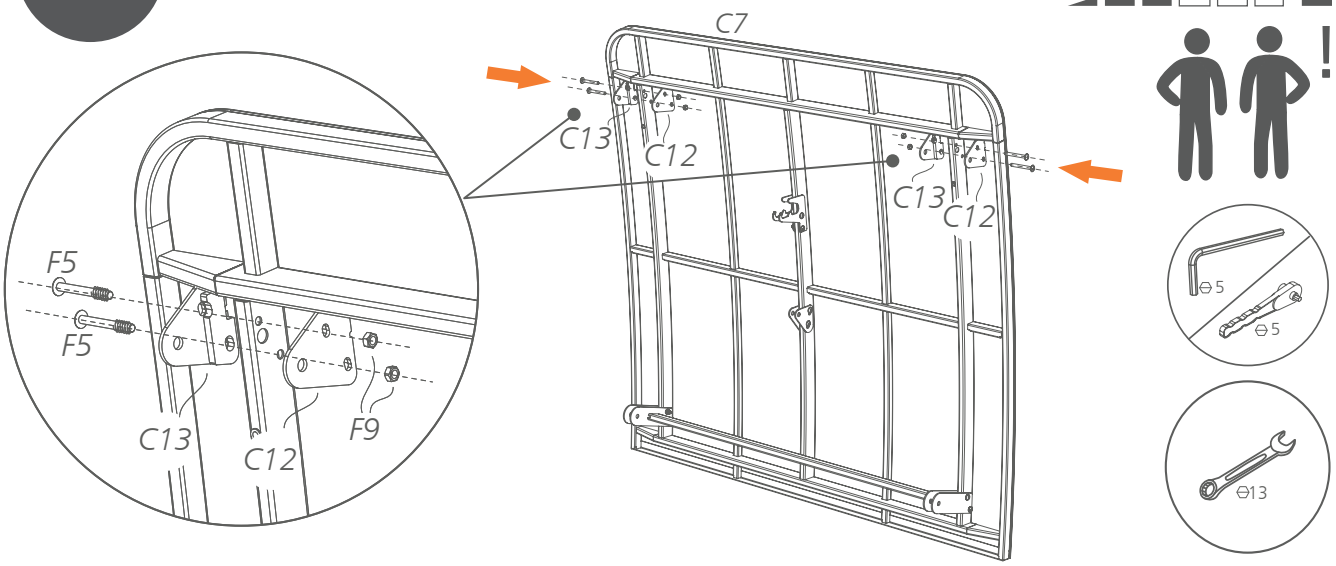

Σ

F5 x8 **F9** x8 **C12** x4 **C13** x4

22. x2

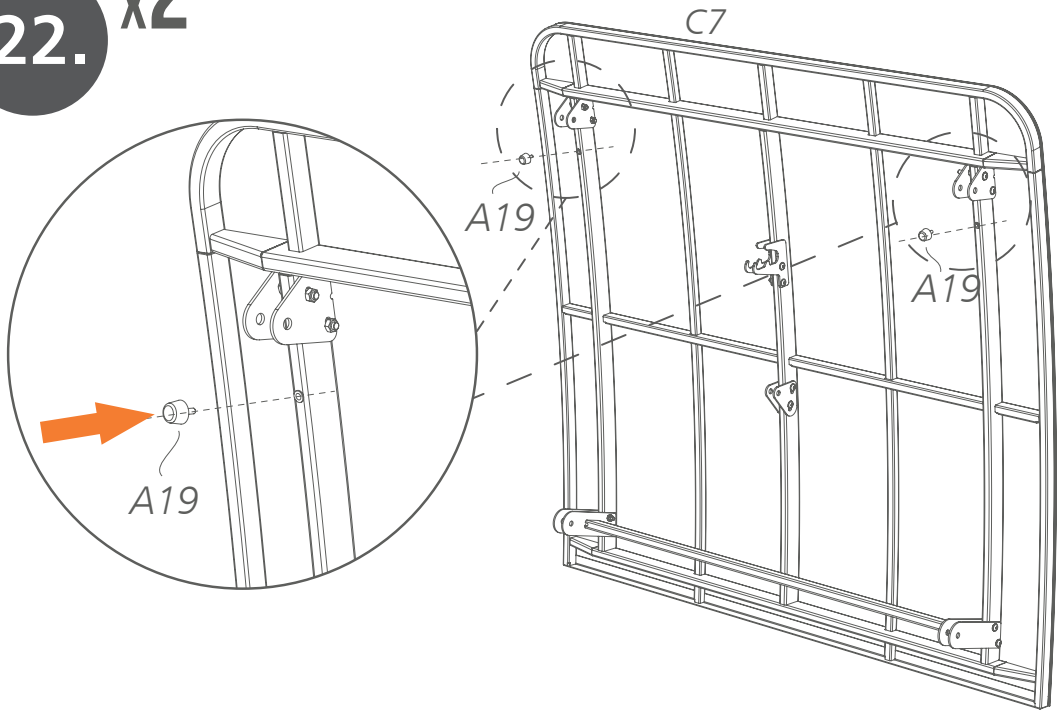

Σ

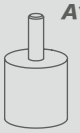

A19 x4

23.

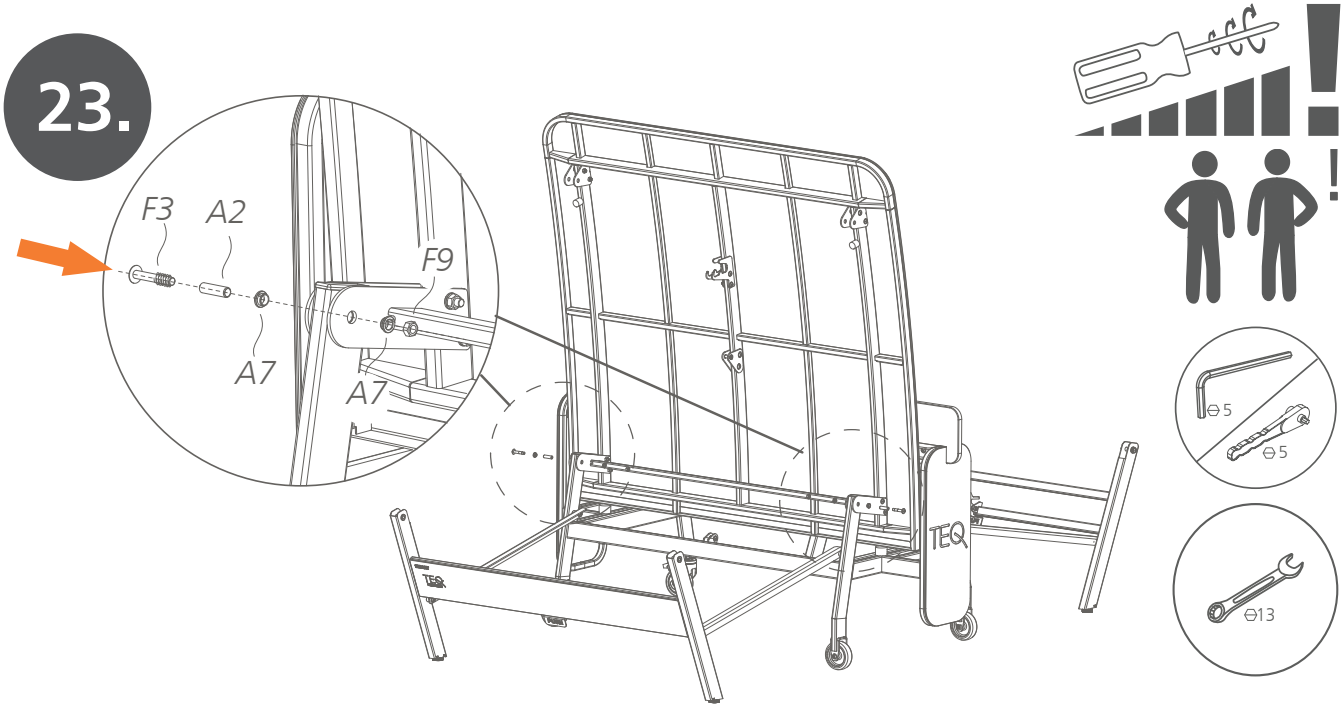

Σ

F3 x2

A2 x2

A7 x4

F9 x2

24.

1.

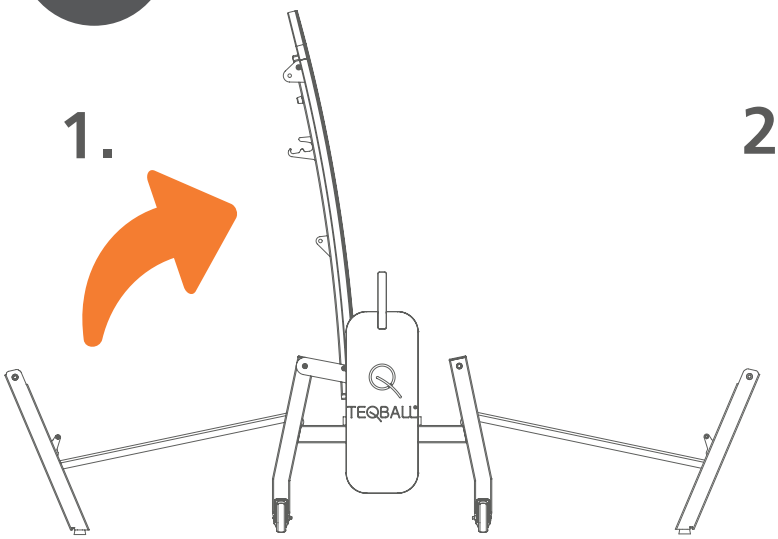

2.

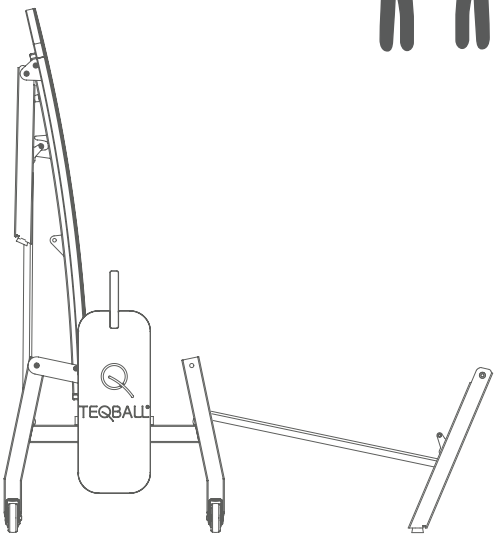

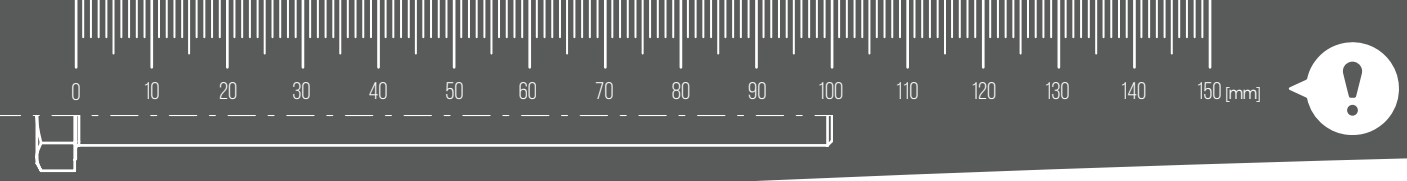
0
10
20
30
40
50
60
70
80
90
100
110
120
130
140
150 [mm]

25.

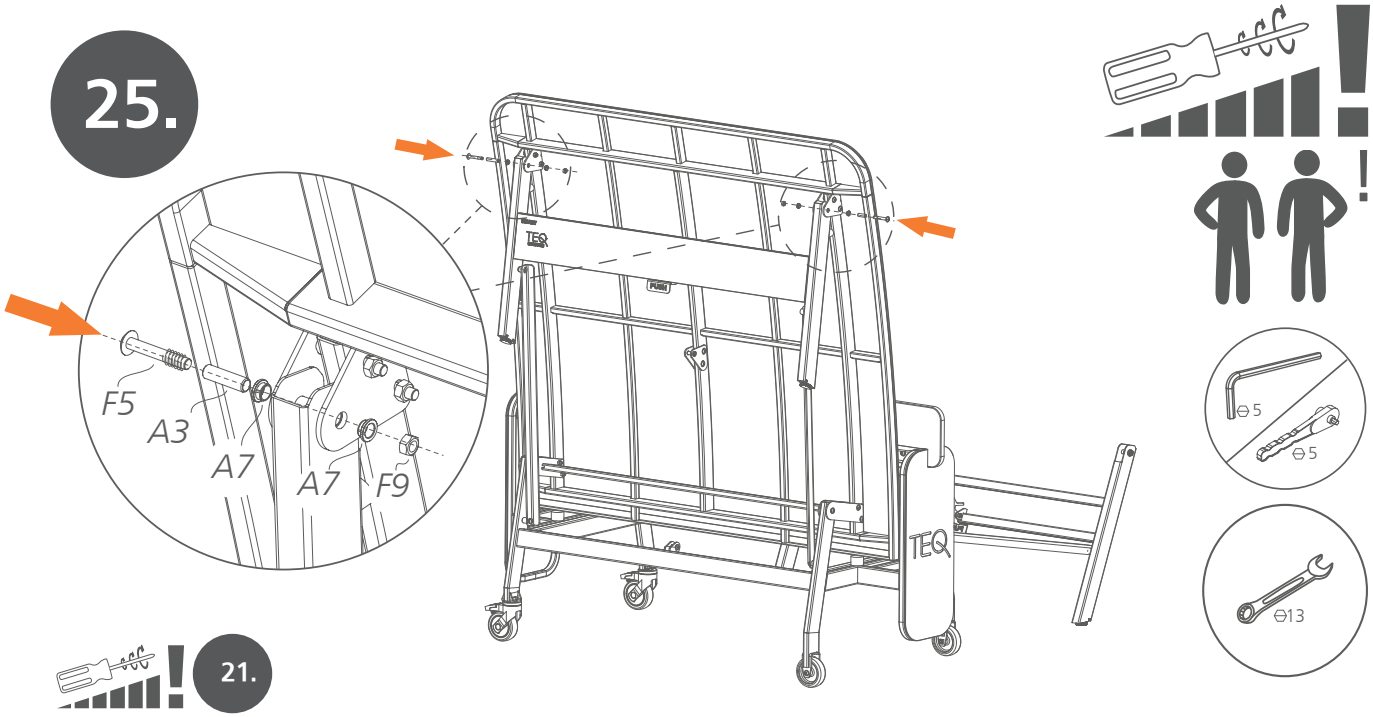
F5
A3
A7
A7
F9
TEQ
PUSH
⊖5
⊖5
⊖13

21.

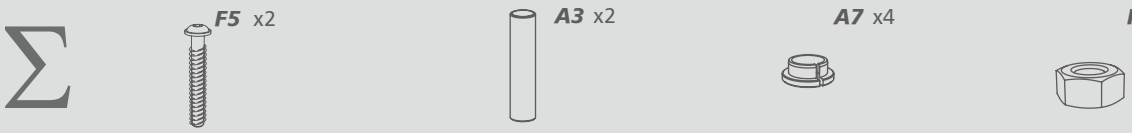
F5 x2
A3 x2
A7 x4
F9 x2

26.

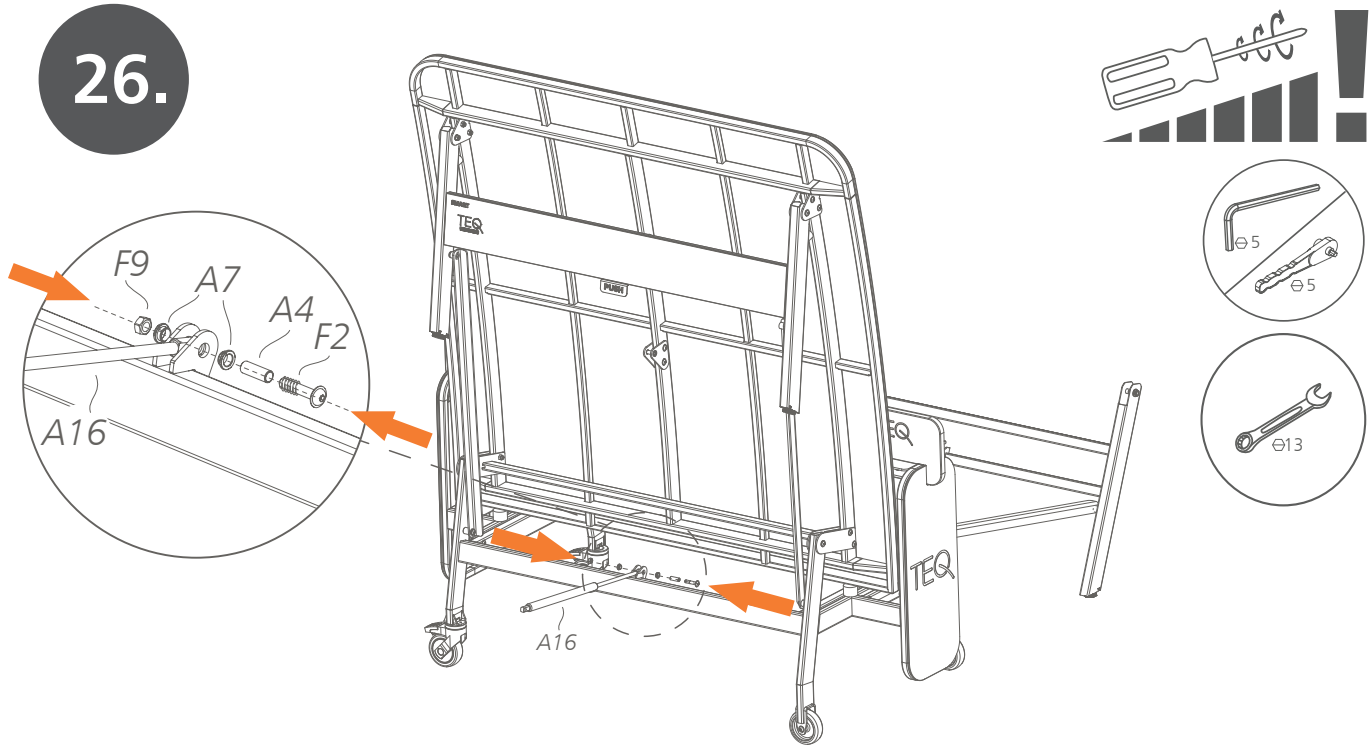
F9
A7
A4
F2
A16
TEQ
PUSH
A16
⊖5
⊖5
⊖13

F2 x1
A4 x1
A7 x2
A16 x1
F9 x1

27.

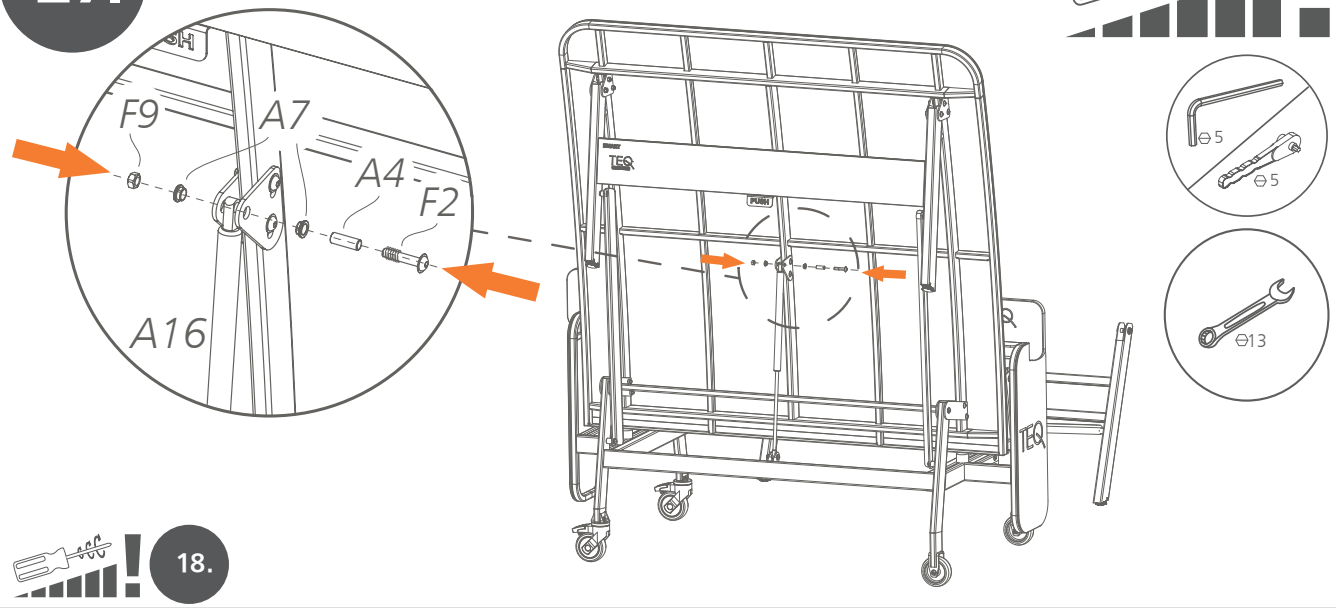

18.

Σ

F2 x1	A4 x1	A7 x2	F9 x1

28.

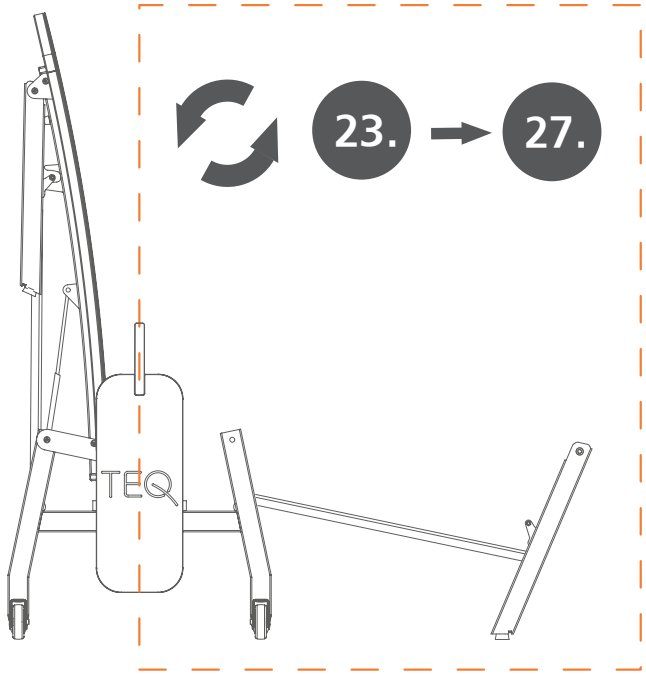

29.

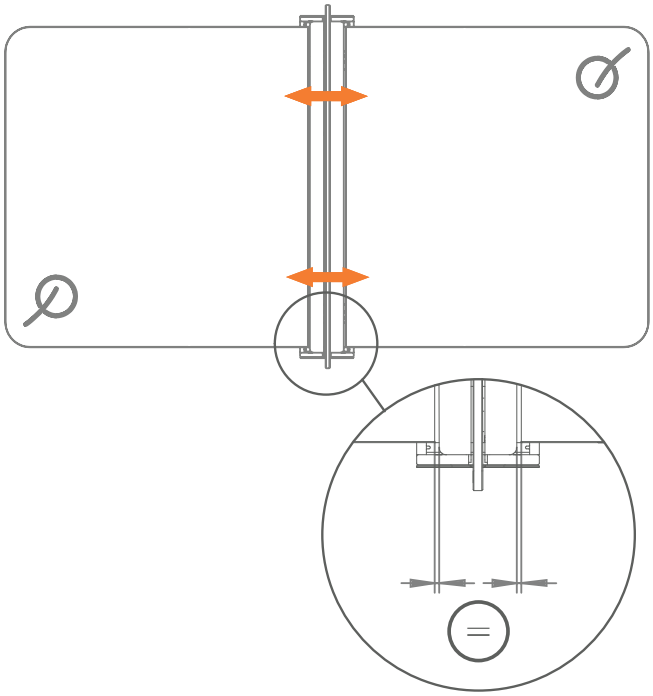

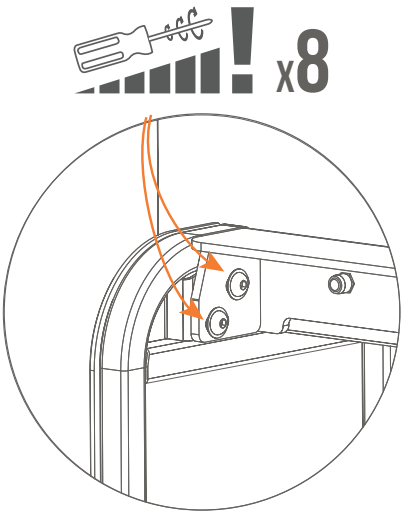

30.

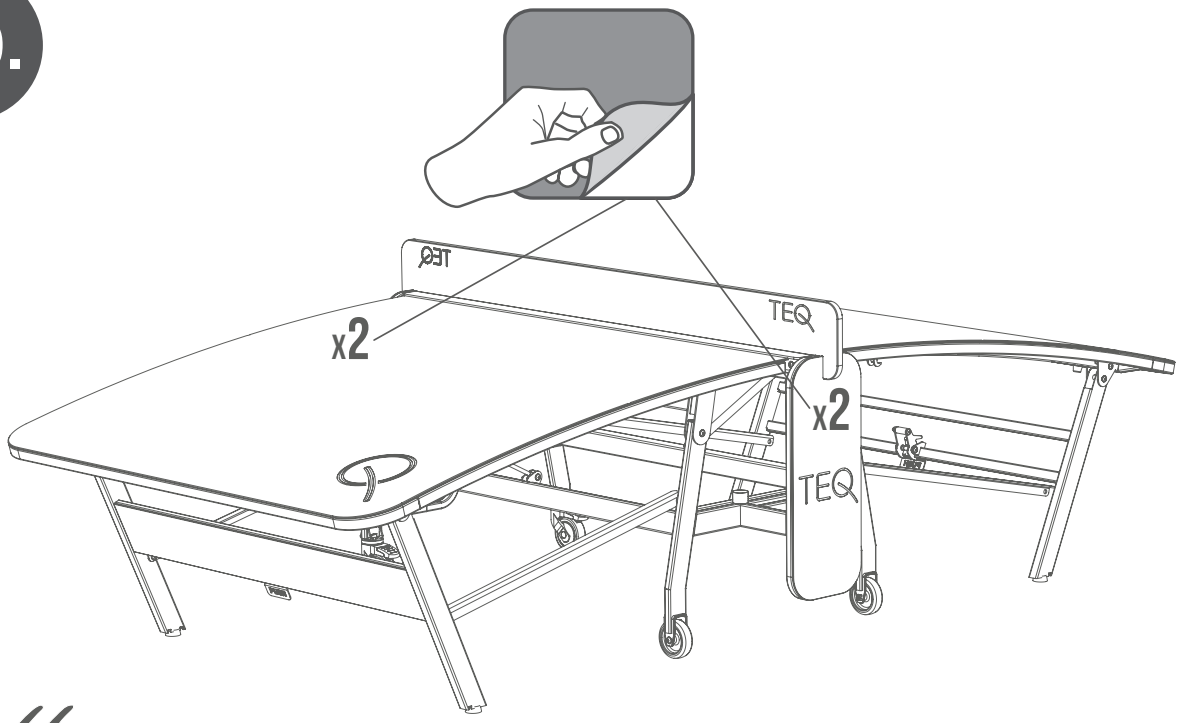

CHECK ALL FASTENERS!

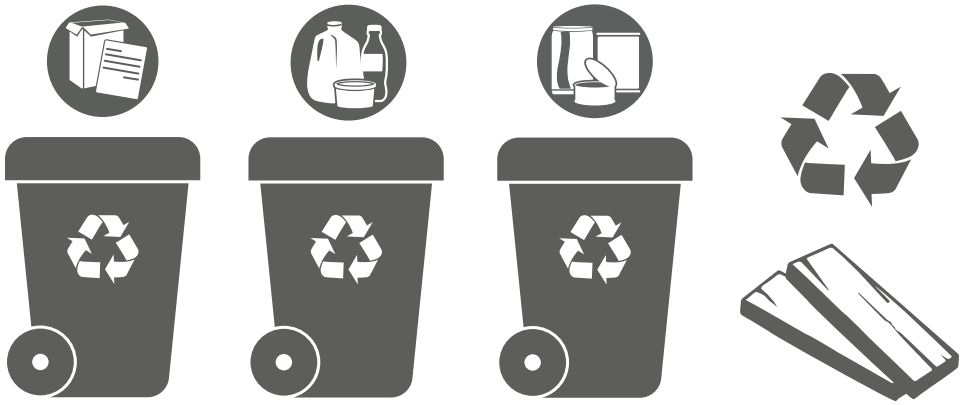

WORLD IS CURVED

TEQ SMART

SMART OWNER'S MANUAL